TAARUP

1994/95

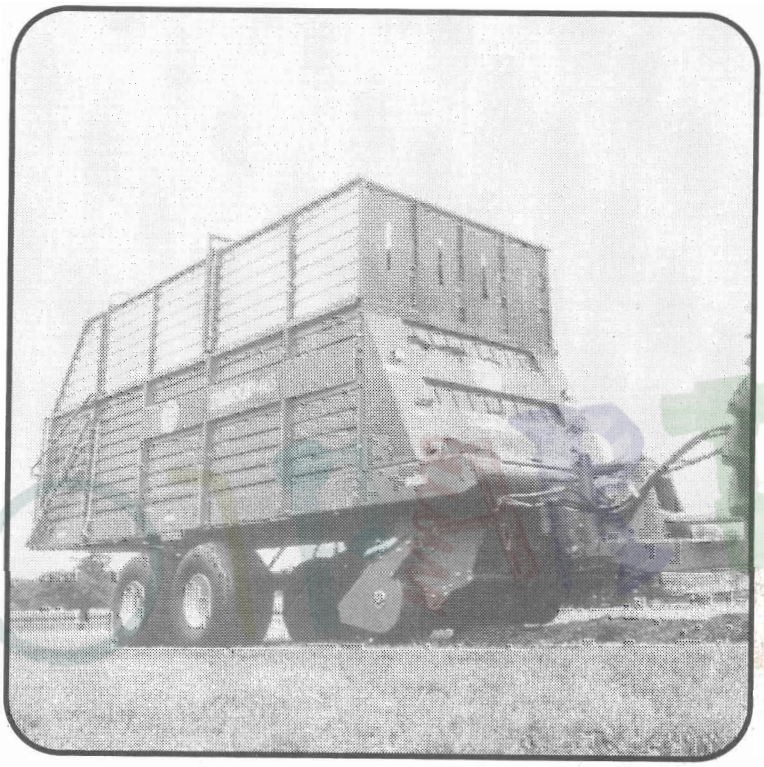

465

DK Reservedelsliste

GB Spare parts list

Theo van der Perk
Tuin- & Parkmachines
Beesd tel. 0345-681493
www.perkbv.com
PERK SERVICE

63.030.151
Index 103-01 (2. udgave/2. edition)

Theo van der Perk Mechanisatiebedrijf bv

Parkweg 95 4153 XL Beesd (NL)

www.Perkbv.com www.Taarup.info

Specialist & Dealer van:

taarup

Kverneland

waar landbouw ondernemen is

JOHN DEERE

Vicon

CLAAS

voor al uw onderdelen **www.1001parts.nl**

Bestilling af reservedele

Alle reservedelstegninger er set i en vinkel "skråt bagfra". D.v.s. at når vi taler højre/venstre, er det altid i forhold til maskinens kørselsretning.

Ved bestilling af reservedele bedes opgivet:

1. Maskinens fabrikationsnummer og leveringsår.
2. Bestillingsnummer (og benævnelse).
3. Antallet af dele.
4. Modtagerens navn og nøjagtige adresse.
5. Forsendelsesmåde.

Anvend kun originale TAARUP reservedele. Ret til specifikations- og konstruktionsændringer forbeholdes.

TAARUP

5300 Kerteminde
Tel. 09 32 10 70 · Telex 50570
Telefax 09 32 30 47

Maskinnr. :

Leveringsår:

Instruction for ordering spare parts

All spare parts drawings are shown at an oblique angle from the rear, - i.e. When stating right/left hand side, this is always in relation to the machine's forward direction. i.e. standing behind machine.

Please state the following information in the order:

1. Machine serial No. and year of delivery.
2. Part number (and description).
3. Number of parts.
4. Name and accurate address of the consignee.
5. How parts are to be sent.

Use original TAARUP spare parts only. We reserve the right to alter specifications and design without notice.

TAARUP

DK 5300 Kerteminde · Denmark
Tel. +45 9 32 10 70 · Telex 50570
Telefax +45 9 32 30 47

Machine No. :

Year of delivery:

Reservedelsfortegnelse

Chassis-ramme, trækstang 1A

Bremsesystemer (skema vist side 4A) 4A

63.544.100 - Trykluftbremser til høj bogie Tyskland
63.676.000 - Hydrauliske bremser til høj bogie

Vognkasse, ræk 10A

Bundkæde, gear 14A

Snittesektion, opsamlertromle 16A

Vinkelgear, kraftoverføringsaksel 22A

El. hydraulisk styreenhed på vogn 26A

Hydraulisk rør- og slangeforbindelser 27A

El. kabler, styreboks, lys m.m. 31A

Topræk 33A

Slibeudstyr 34A

Spare parts list

Chassis-frame, drawbar 1A

Brake systems (scheme shown page 4A) 4A

63.544.100 - Air pressure brakes for high bogie Germany
63.676.000 - Hydraulic brakes for high bogie

Wagon compartment, side extension 10A

Chain conveyor, gear 14A

Chopping section, pick-up drum 16A

Angle gearbox, P.T.O. shaft 22A

Electric hydraulic control unit on wagon 26A

Hydraulic pipe- and tube connections 27A

Electric cables, control box, light etc. 31A

Top extension 33A

Grinding device 34A

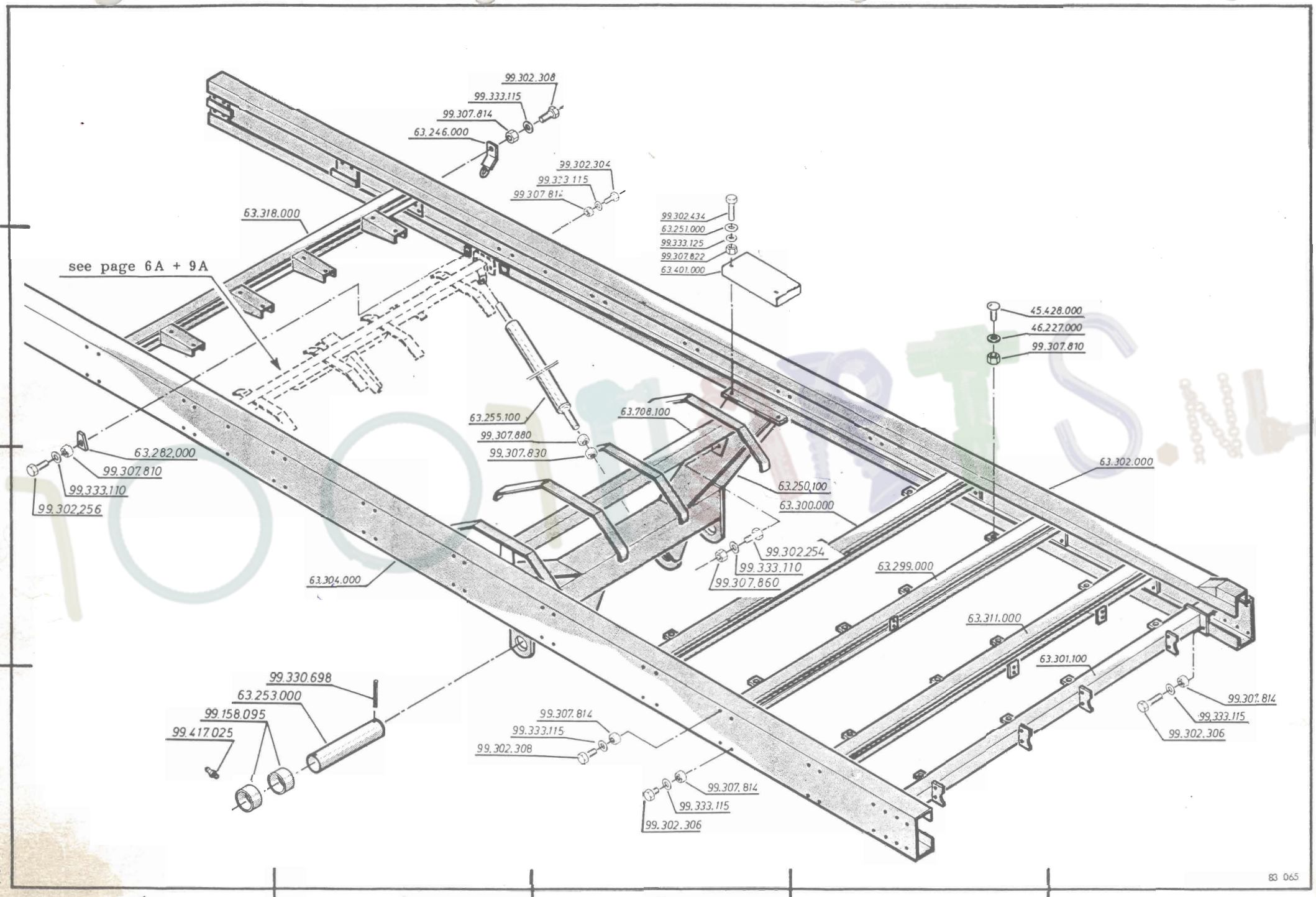
99.302.308
99.333.115
99.307.814
63.246.000
99.302.304
99.333.115
99.307.814
63.318.000
99.302.434
63.251.000
99.333.125
99.307.822
63.401.000
see page 6A + 9A
45.428.000
46.227.000
99.307.810
63.255.100
63.708.100
99.307.880
99.307.830
63.282.000
99.307.810
99.333.110
99.302.256
63.302.000
63.250.100
63.300.000
99.302.254
99.333.110
99.307.860
63.299.000
63.304.000
63.311.000
63.301.100
99.330.698
63.253.000
99.158.095
99.417.025
99.307.814
99.333.115
99.302.308
99.307.814
99.333.115
99.302.306
99.307.814
99.333.115
99.302.306
83 065

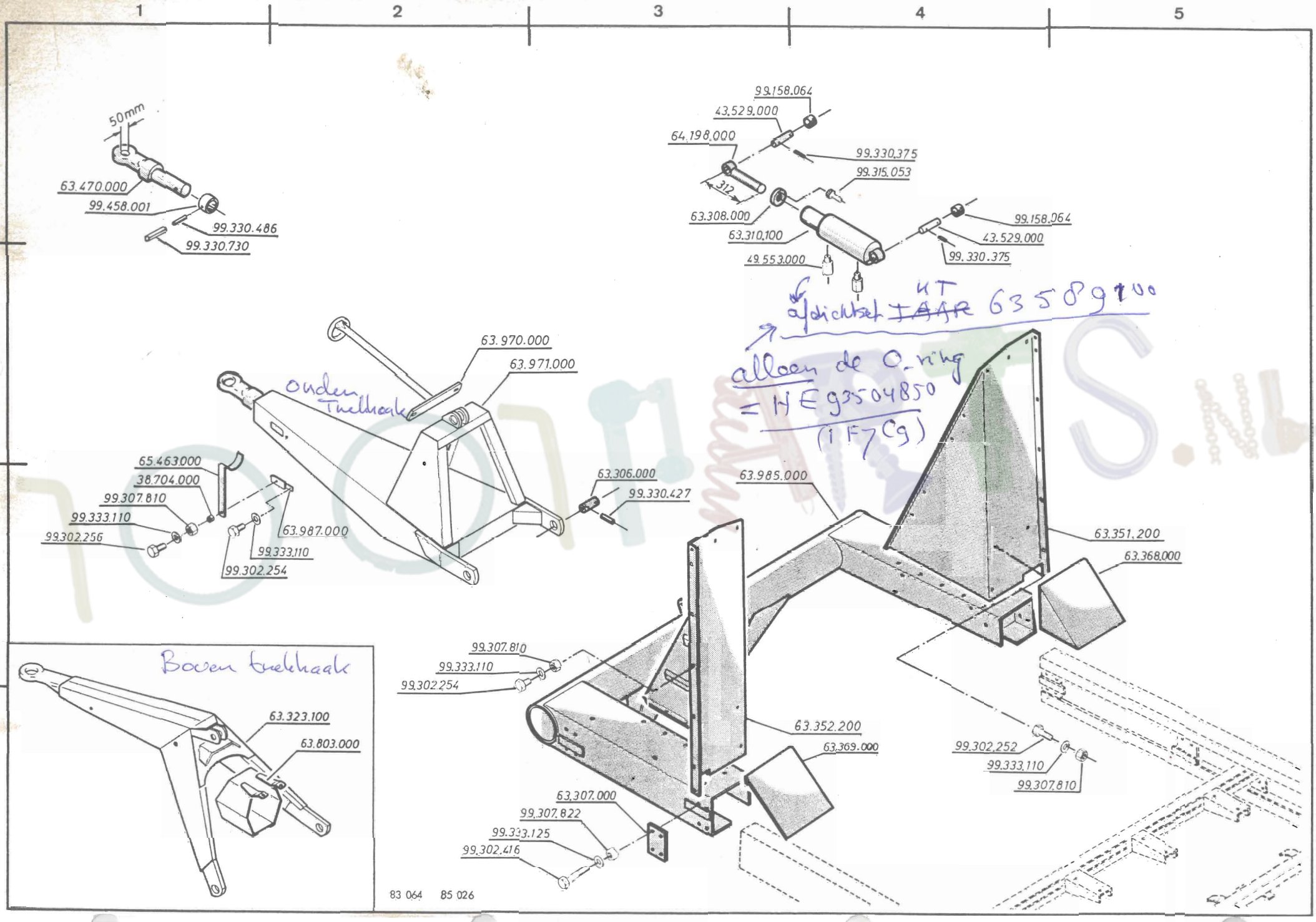
1
2
3
4
5
a
b
c
d
50mm
63.470.000
99.458.001
99.330.486
99.330.730
99.158.064
43.529.000
64.198.000
99.330.375
99.315.053
312
63.308.000
63.310.100
99.158.064
43.529.000
99.330.375
49.553.000
afdichtset ~~1 AAR~~ UT 63589100
alleen de O-ring
= HE9504850
(1F7C9)
63.970.000
63.971.000
onder trekhaak
65.463.000
38.704.000
99.307.810
99.333.110
99.302.256
63.987.000
99.333.110
99.302.254
63.306.000
99.330.427
63.985.000
63.351.200
63.368.000
Boven trekhaak
63.323.100
63.803.000
99.307.810
99.333.110
99.302.254
63.352.200
63.369.000
99.302.252
99.333.110
99.307.810
63.307.000
99.307.822
99.333.125
99.302.416
83 064
85 026

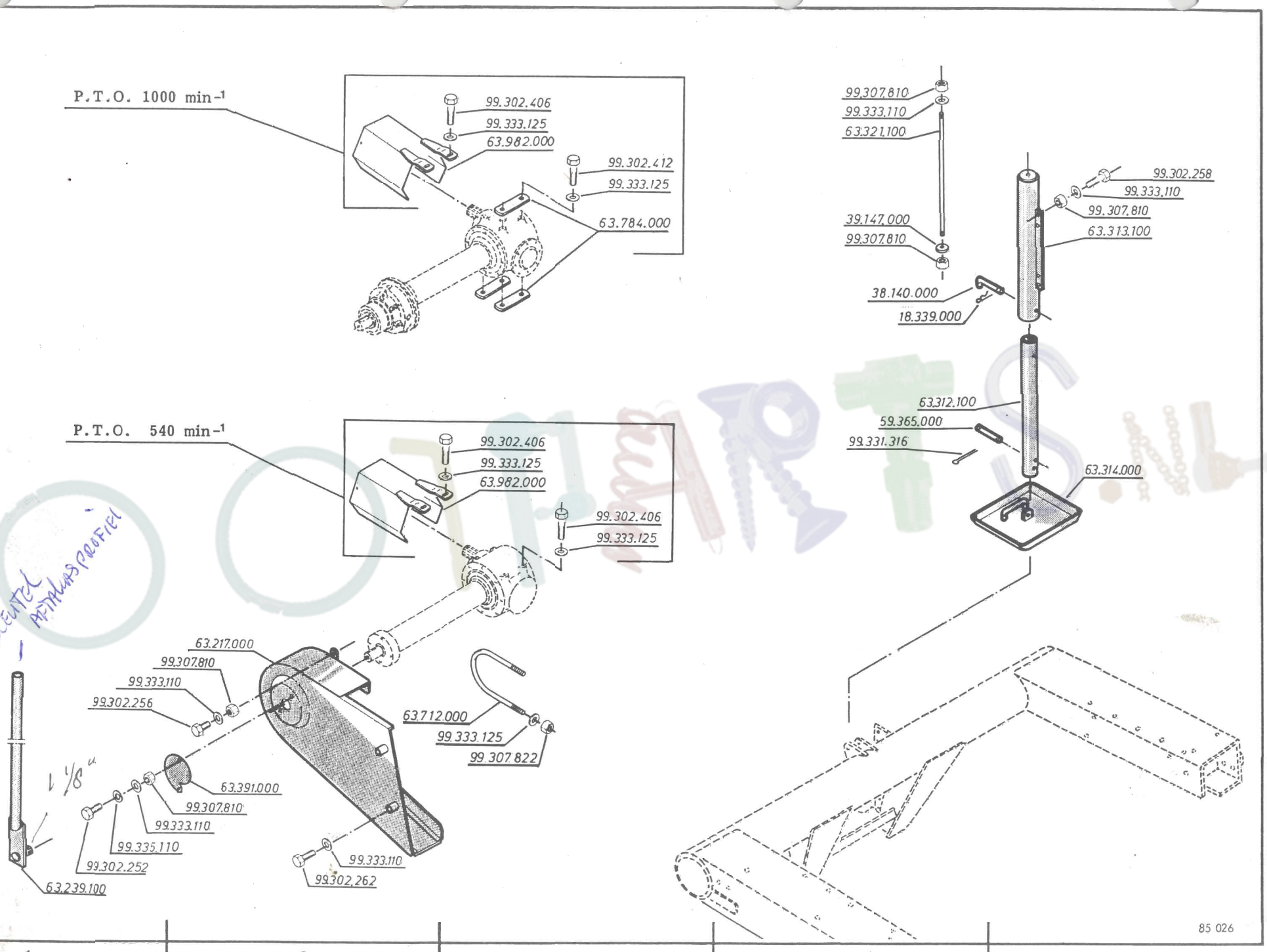
P.T.O. 1000 min-1
99.302.406
99.333.125
63.982.000
99.302.412
99.333.125
63.784.000
99.307.810
99.333.110
63.321.100
39.147.000
99.307.810
99.302.258
99.333.110
99.307.810
63.313.100
38.140.000
18.339.000
63.312.100
59.365.000
99.331.316
63.314.000
P.T.O. 540 min-1
99.302.406
99.333.125
63.982.000
99.302.406
99.333.125
SLEUTEL
APTHUASPOOFIEL
63.217.000
99.307.810
99.333.110
99.302.256
63.712.000
99.333.125
99.307.822
1 1/8"
63.391.000
99.307.810
99.333.110
99.335.110
99.302.252
63.239.100
99.333.110
99.302.262
85 026
a
b
c
d
3A
1
2
3
4
5

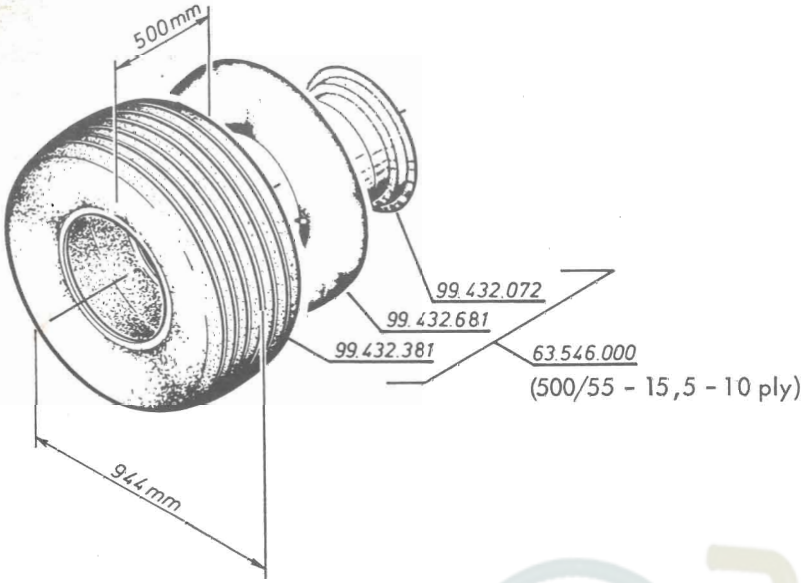

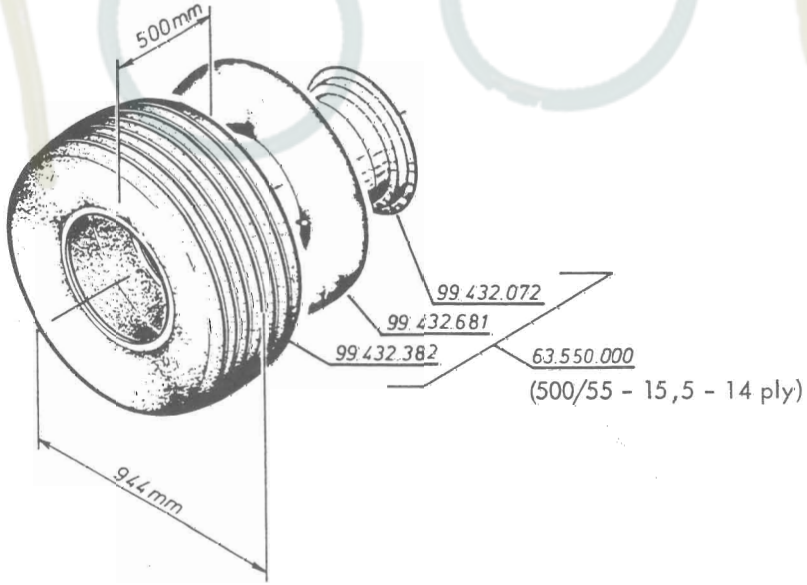

83 068

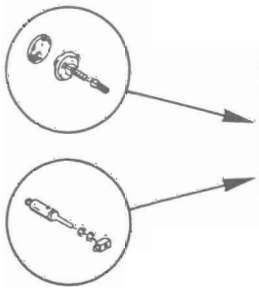

	see page 4A 9A										
Compl. No.	C	D	E	F	G	H	K	M	N	O	P
63.544.100				4			2 H+V		1	1	1
63.676.000	2	4	2		1	1		1			

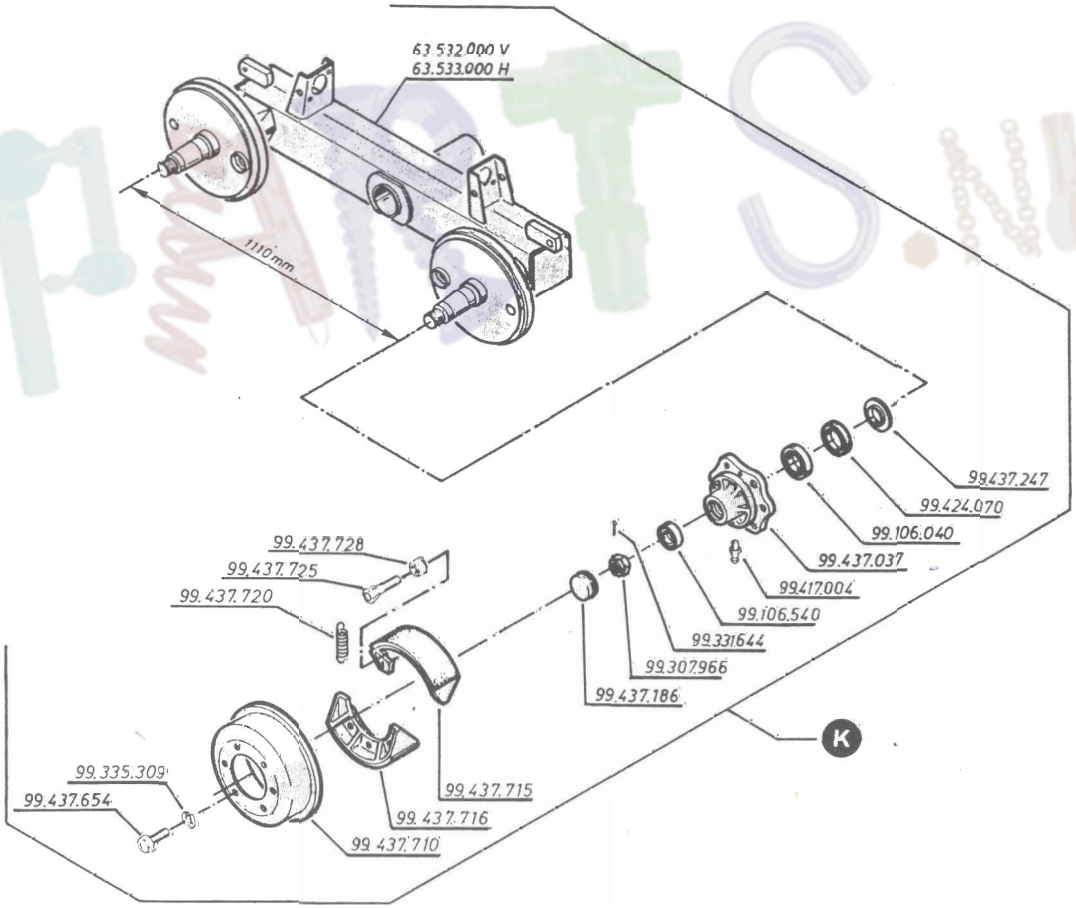

85 014

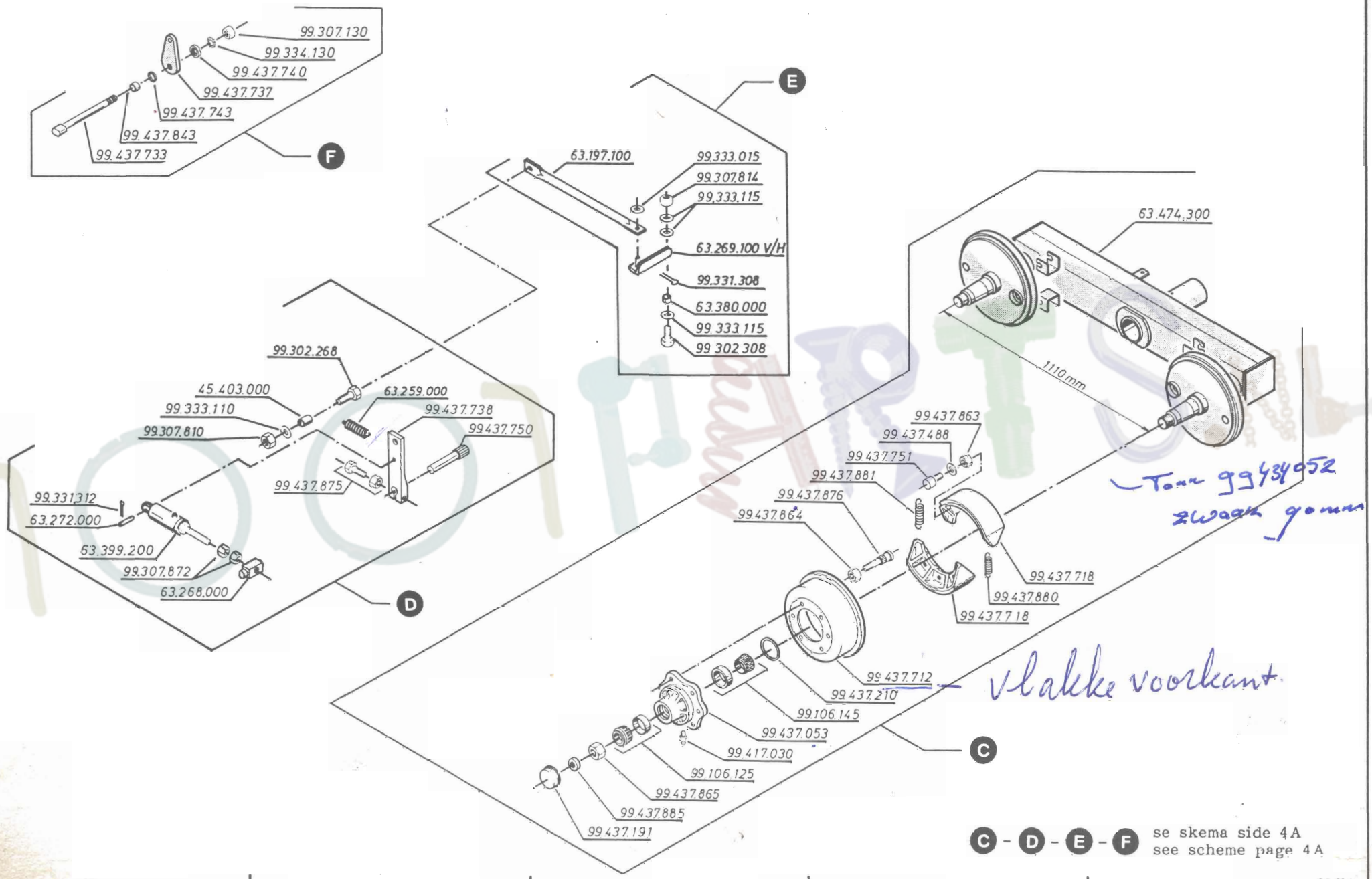

C - D - E - F se skema side 4A
see scheme page 4A

85 014

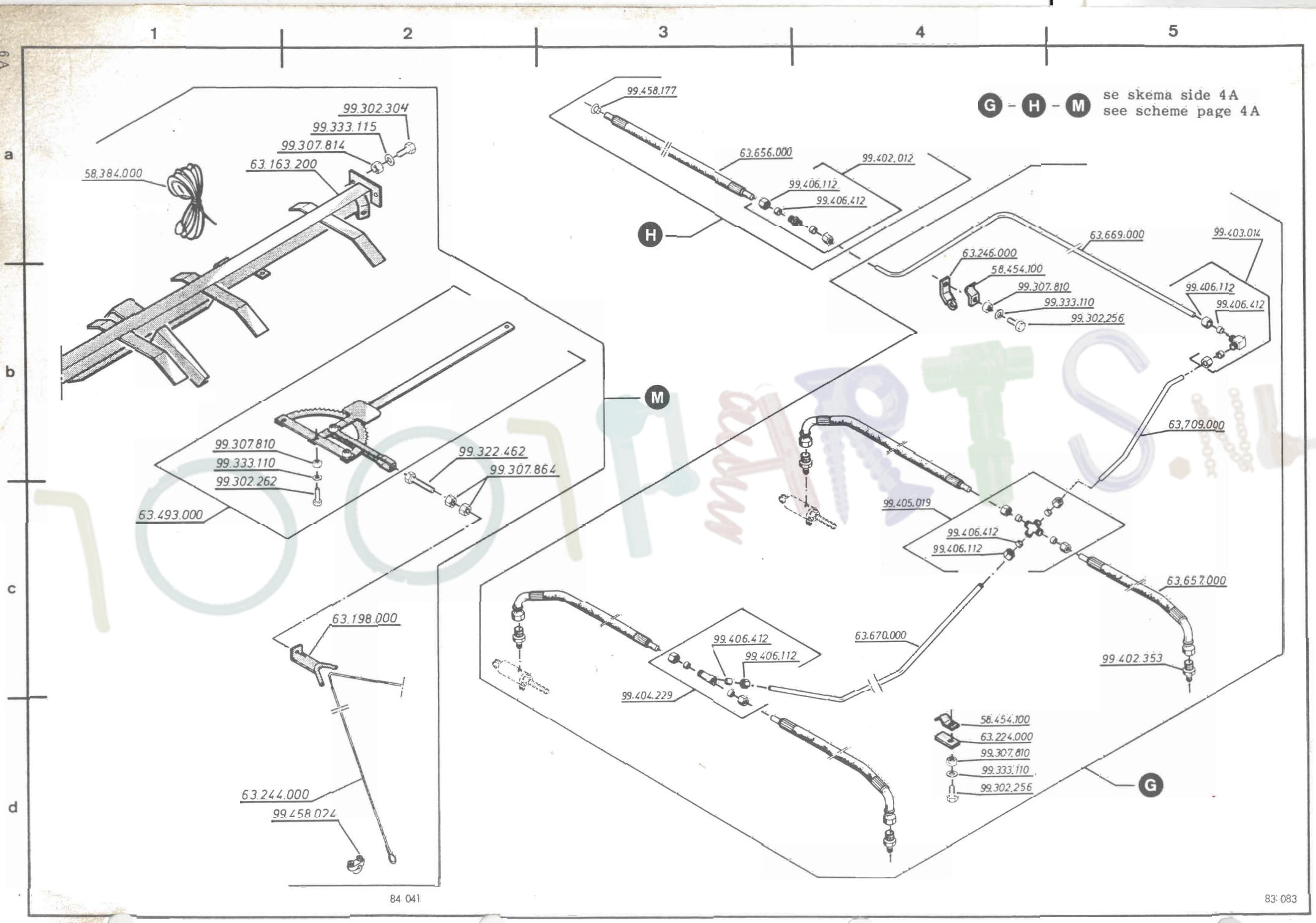
1
2
3
4
5
a
b
c
d
G - H - M se skema side 4A
see scheme page 4A
99.302.304
99.333.115
99.307.814
63.163.200
58.384.000
99.458.177
63.656.000
99.402.012
99.406.112
99.406.412
H
63.669.000
99.403.014
63.246.000
58.454.100
99.307.810
99.333.110
99.302.256
99.406.112
99.406.412
M
63.709.000
99.307.810
99.333.110
99.302.262
63.493.000
99.322.462
99.307.864
99.405.019
99.406.412
99.406.112
63.657.000
63.198.000
99.406.412
99.406.112
63.670.000
99.402.353
99.404.229
58.454.100
63.224.000
99.307.810
99.333.110
99.302.256
G
63.244.000
99.458.024
84.041
83.083

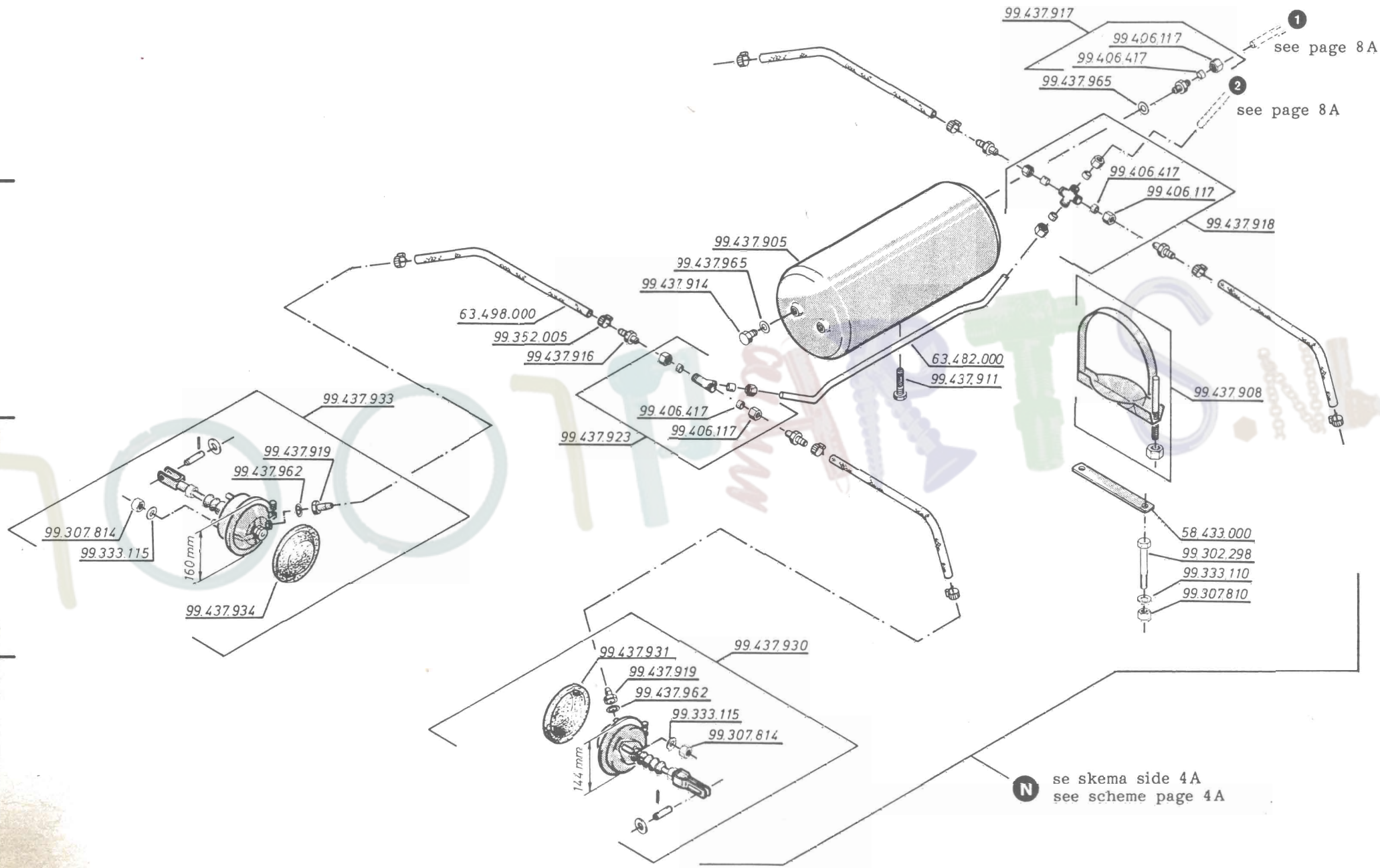
99.437.917
99.406.117
99.406.417
99.437.965
1
see page 8A
2
see page 8A
99.406.417
99.406.117
99.437.918
99.437.905
99.437.965
99.437.914
63.498.000
99.352.005
99.437.916
63.482.000
99.437.911
99.437.908
99.437.933
99.406.417
99.406.117
99.437.923
99.437.919
99.437.962
99.307.814
99.333.115
160 mm
99.437.934
58.433.000
99.302.298
99.333.110
99.307.810
99.437.930
99.437.931
99.437.919
99.437.962
99.333.115
99.307.814
144 mm
N
se skema side 4A
see scheme page 4A
83 056

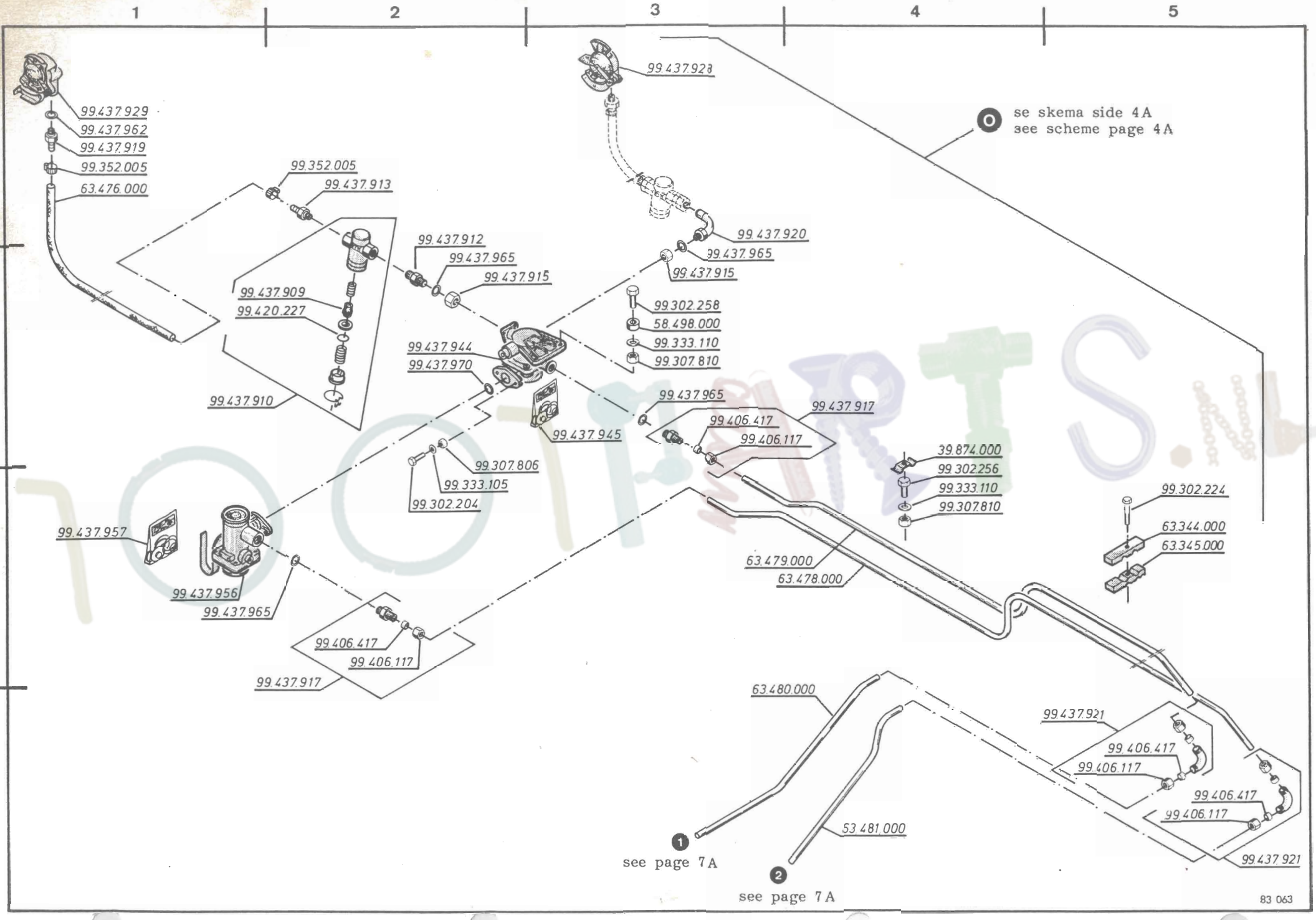
1
2
3
4
5
a
b
c
d
99.437.928
99.437.929
99.437.962
99.437.919
99.352.005
63.476.000
99.352.005
99.437.913
99.437.912
99.437.965
99.437.915
99.437.909
99.420.227
99.437.910
99.437.920
99.437.965
99.437.915
99.302.258
58.498.000
99.333.110
99.307.810
99.437.944
99.437.970
99.437.945
99.437.965
99.437.917
99.406.417
99.406.117
99.307.806
99.333.105
99.302.204
39.874.000
99.302.256
99.333.110
99.307.810
99.302.224
63.344.000
63.345.000
99.437.957
99.437.956
99.437.965
63.479.000
63.478.000
99.406.417
99.406.117
99.437.917
63.480.000
99.437.921
99.406.417
99.406.117
99.406.417
99.406.117
53.481.000
99.437.921
1
see page 7A
2
see page 7A
O
se skema side 4A
see scheme page 4A
83 063

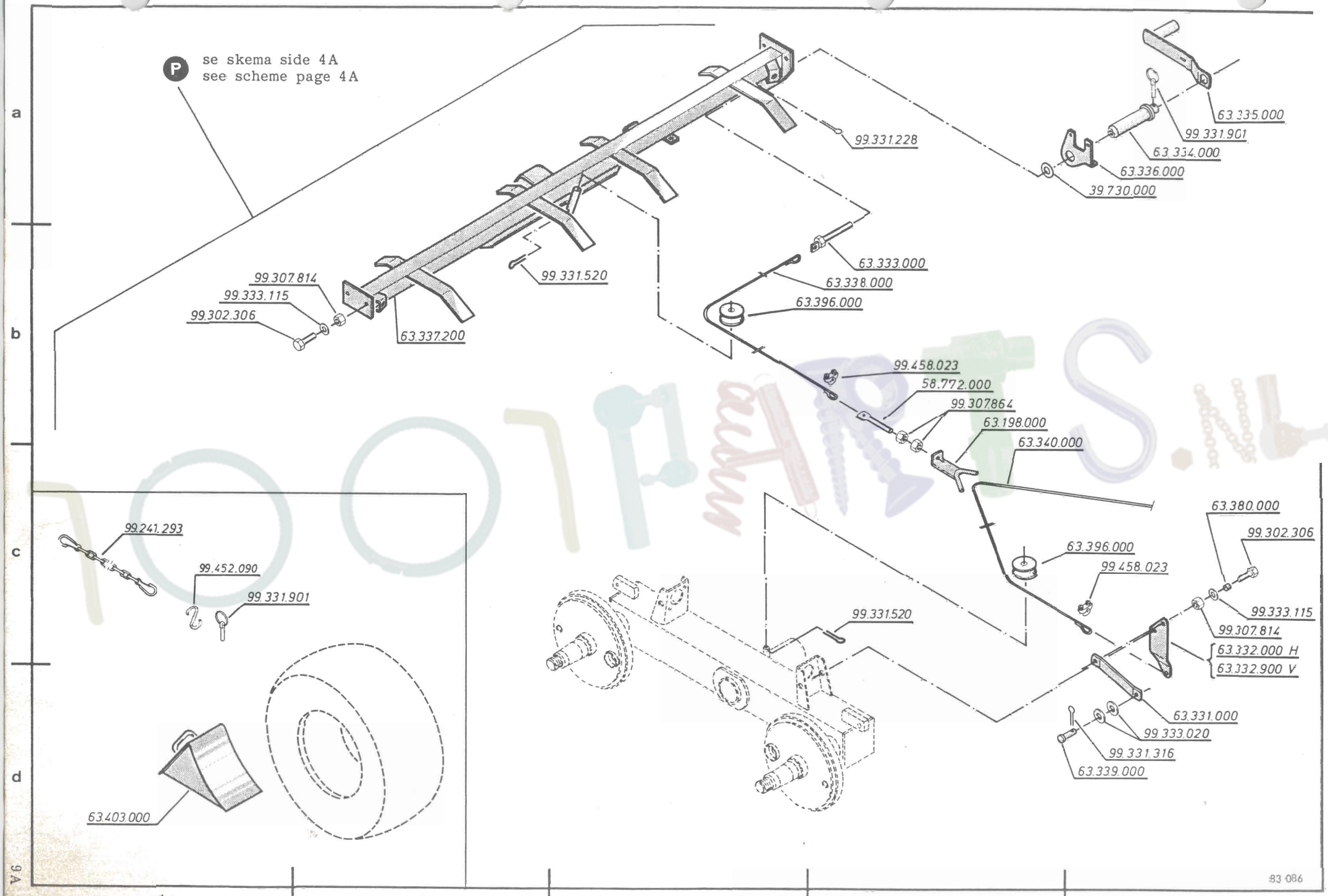
P
se skema side 4A
see scheme page 4A
99.331.228
63.335.000
99.331.901
63.334.000
63.336.000
39.730.000
63.333.000
63.338.000
63.396.000
99.331.520
99.307.814
99.333.115
99.302.306
63.337.200
99.458.023
58.772.000
99.307.864
63.198.000
63.340.000
63.380.000
99.302.306
63.396.000
99.458.023
99.333.115
99.307.814
63.332.000 H
63.332.900 V
99.331.520
63.331.000
99.333.020
99.331.316
63.339.000
99.241.293
99.452.090
99.331.901
63.403.000
83 086
a
b
c
d
1
2
3
4
5
9A

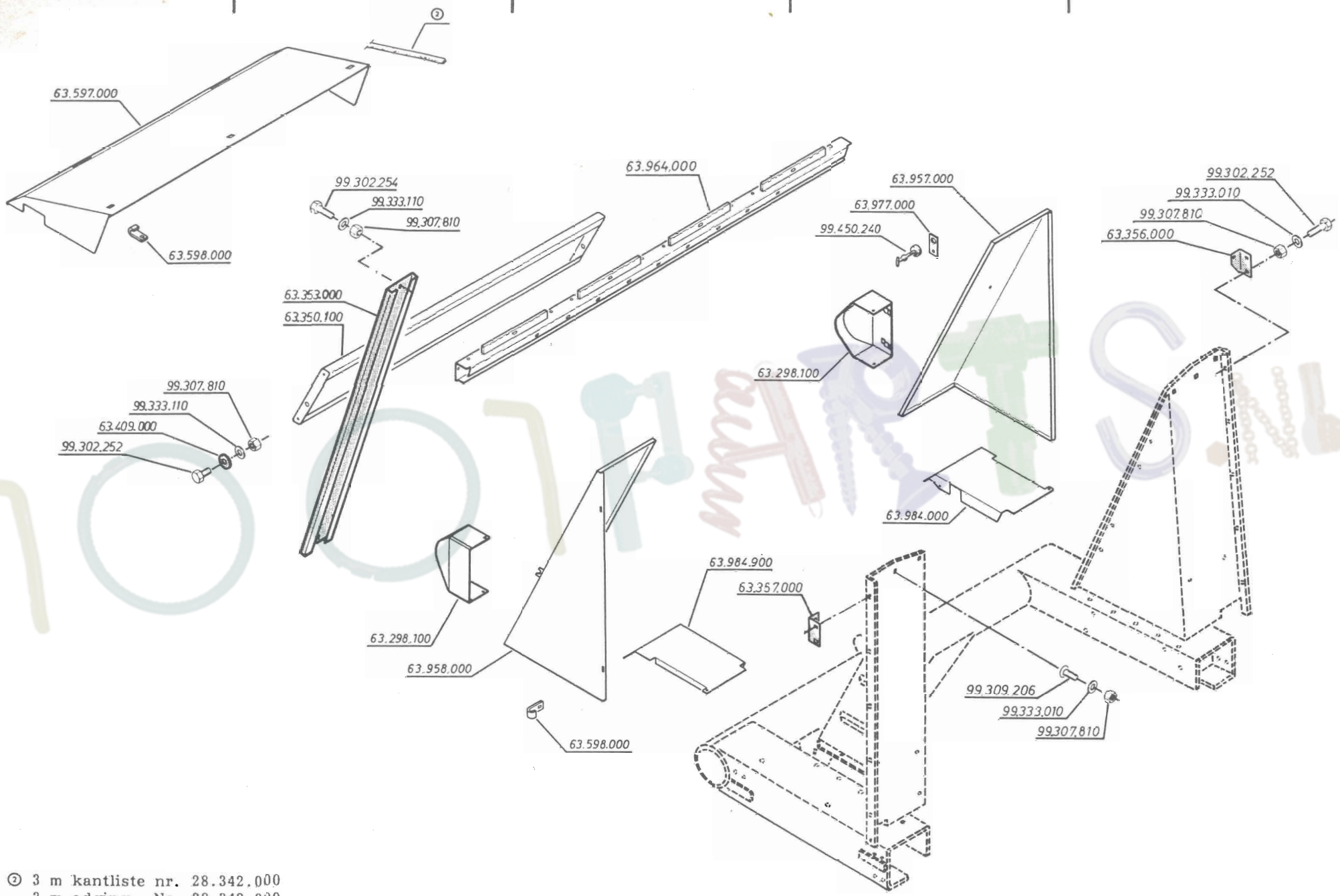

② 3 m kantliste nr. 28.342.000
3 m edging No. 28.342.000

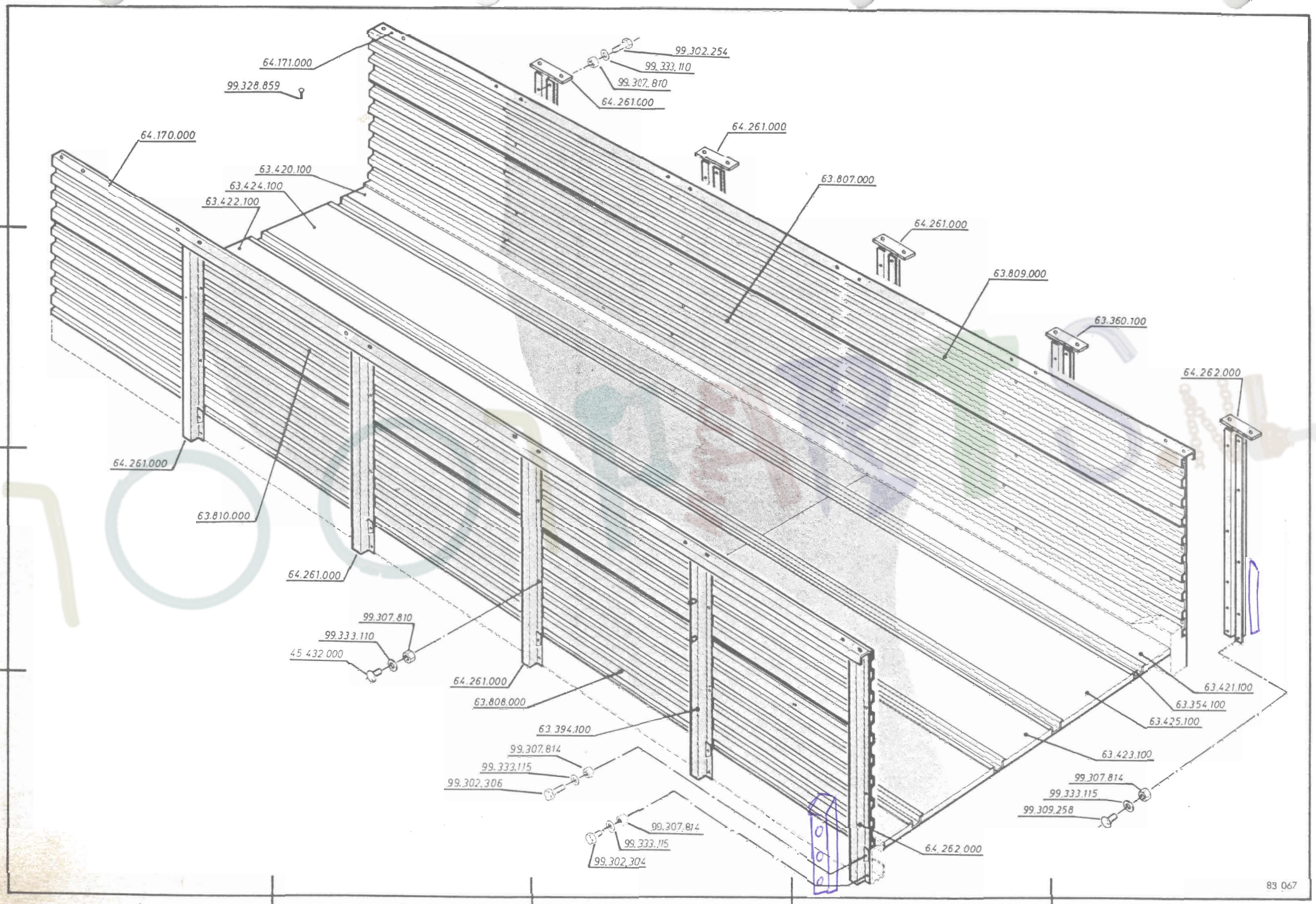
64.171.000
99.328.859
99.302.254
99.333.110
99.307.810
64.261.000
64.261.000
64.170.000
63.420.100
63.424.100
63.422.100
63.807.000
64.261.000
63.809.000
63.360.100
64.262.000
64.261.000
63.810.000
64.261.000
99.307.810
99.333.110
45 432 000
64.261.000
63.808.000
63.394.100
99.307.814
99.333.115
99.302.306
99.307.814
99.333.115
99.302.304
64.262.000
63.421.100
63.354.100
63.425.100
63.423.100
99.307.814
99.333.115
99.309.258
a
b
c
d
1
2
3
4
5
11A
83 067

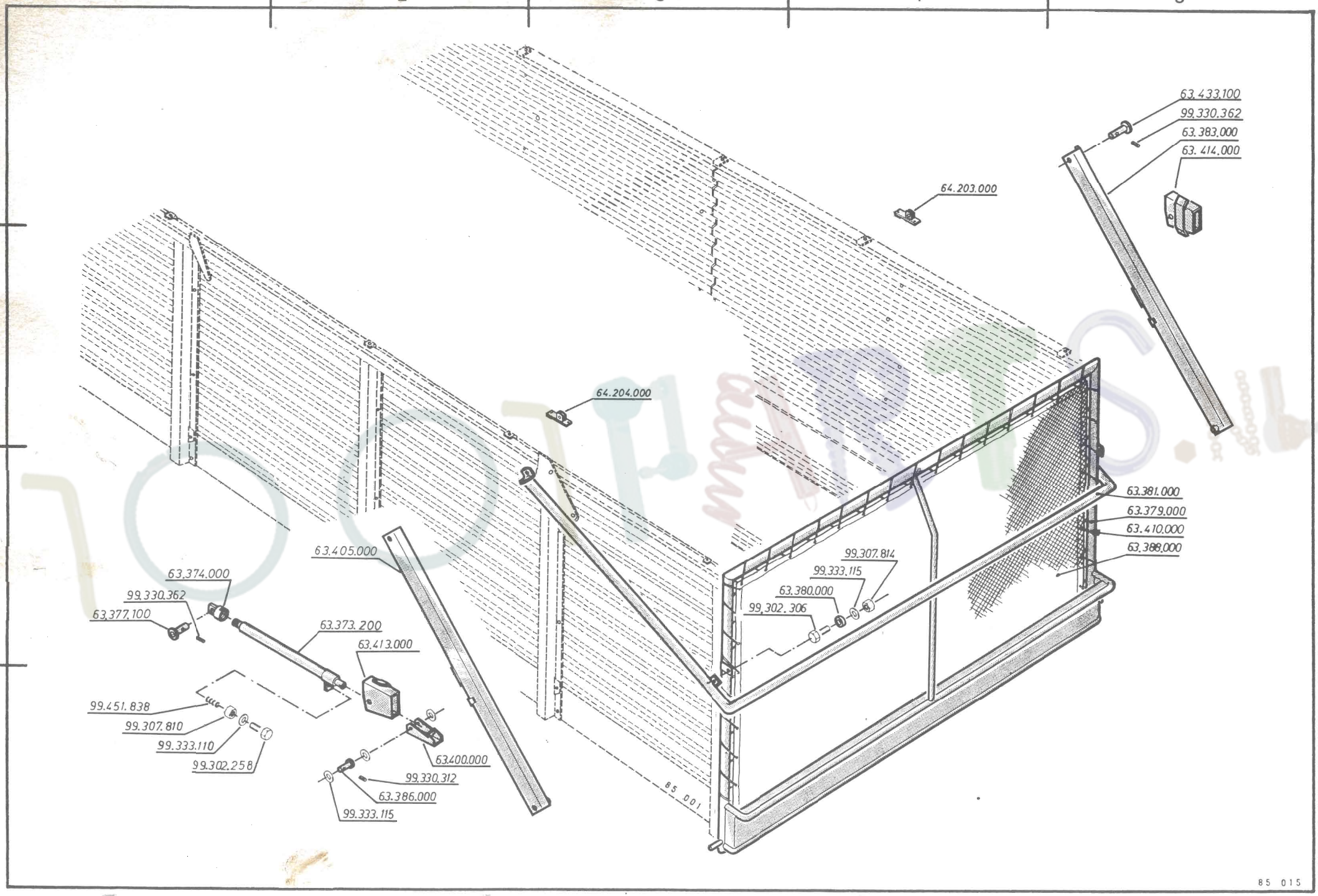
1
2
3
4
5
a
b
c
d
12A
63.433.100
99.330.362
63.383.000
63.414.000
64.203.000
64.204.000
63.381.000
63.379.000
63.410.000
63.388.000
99.307.814
99.333.115
63.380.000
99.302.306
63.405.000
63.374.000
99.330.362
63.377.100
63.373.200
63.413.000
99.451.838
99.307.810
99.333.110
99.302.258
63.400.000
99.330.312
63.386.000
99.333.115
85 001
85 015

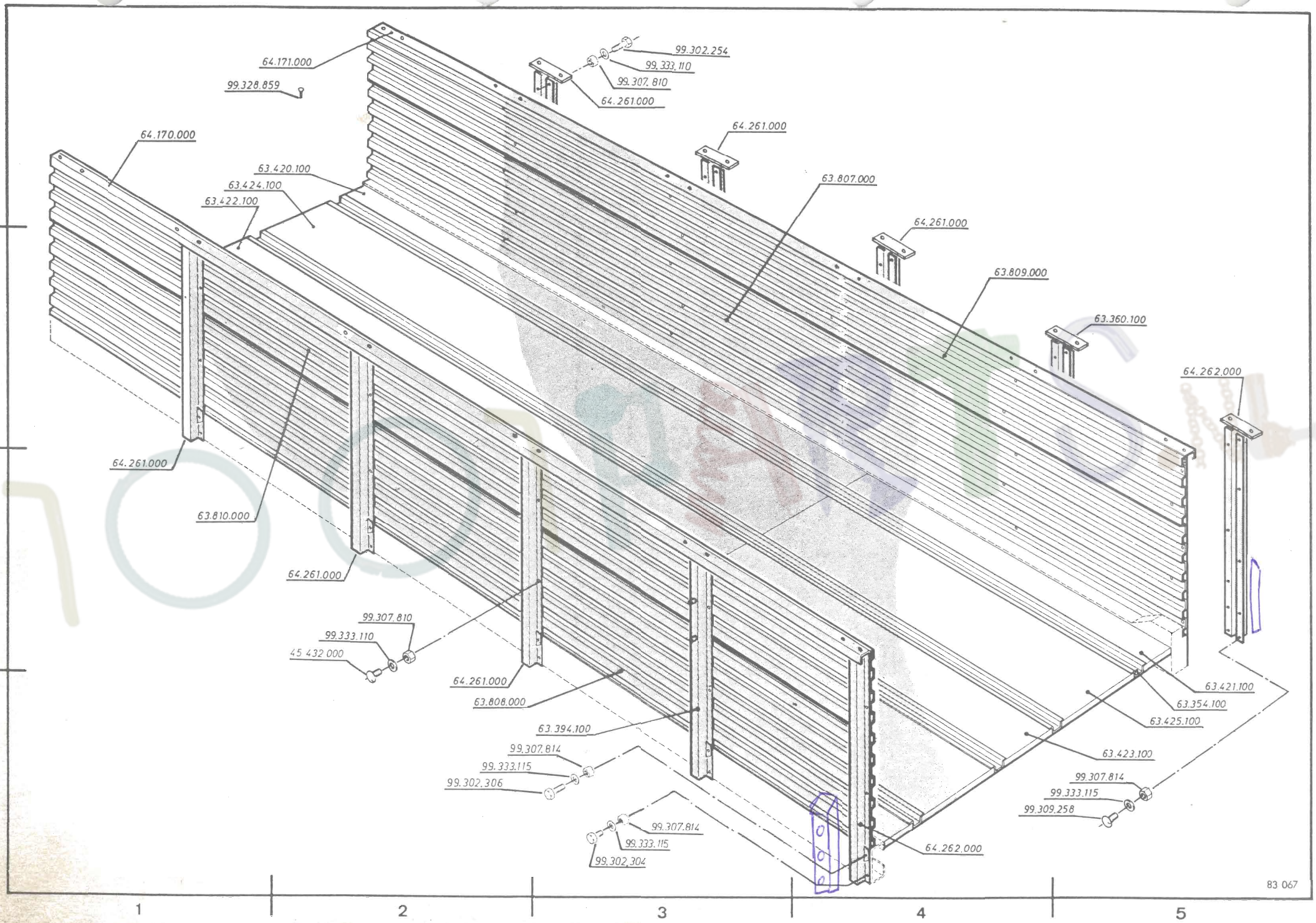
64.171.000
99.328.859
99.302.254
99.333.110
99.307.810
64.261.000
64.261.000
64.170.000
63.420.100
63.424.100
63.422.100
63.807.000
64.261.000
63.809.000
63.360.100
64.262.000
64.261.000
63.810.000
64.261.000
99.307.810
99.333.110
45 432 000
64.261.000
63.808.000
63.394.100
99.307.814
99.333.115
99.302.306
99.307.814
99.333.115
99.302.304
64.262.000
63.421.100
63.354.100
63.425.100
63.423.100
99.307.814
99.333.115
99.309.258
83 067
a
b
c
d
1
2
3
4
5
11A

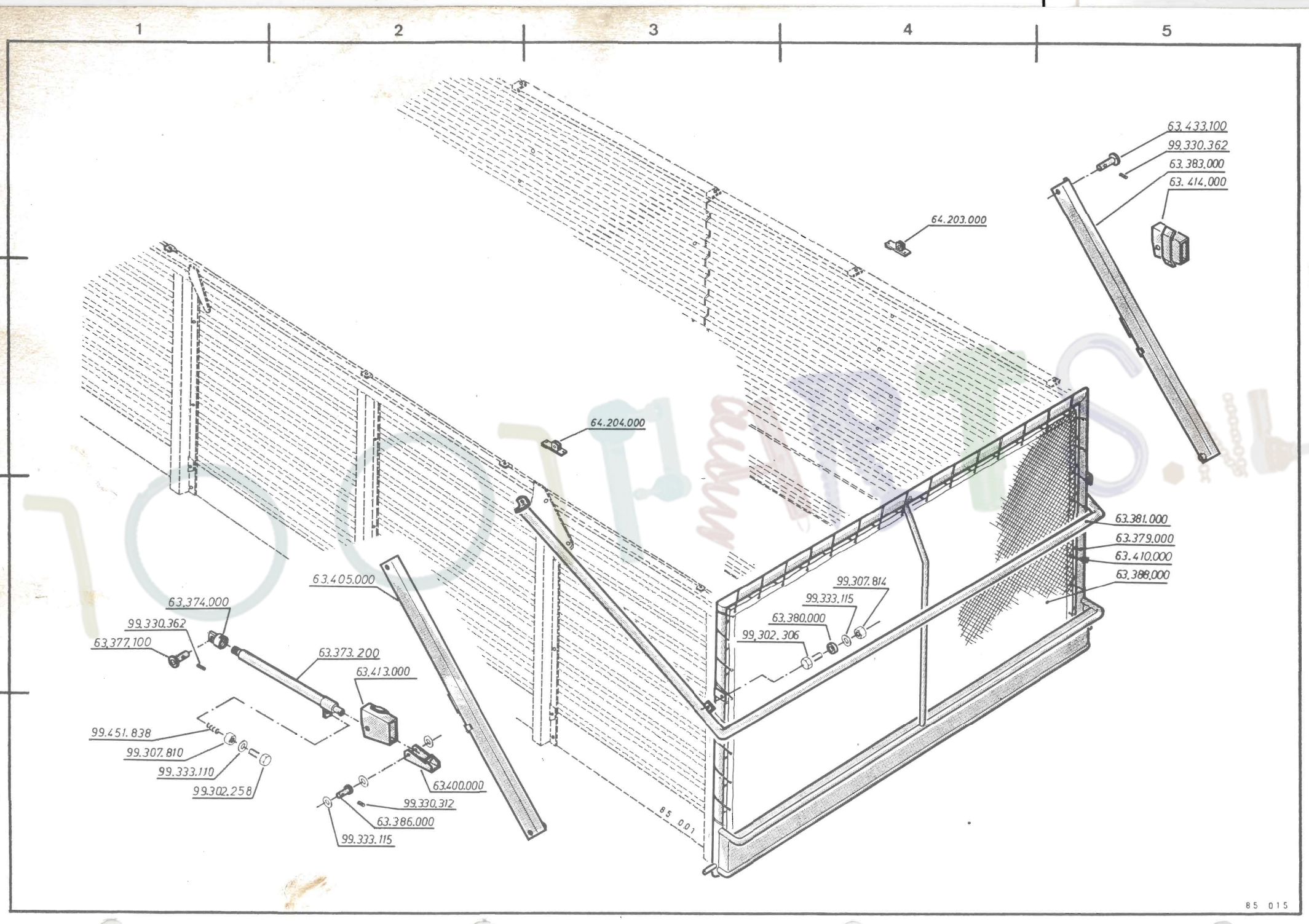
1
2
3
4
5
a
b
c
d
63.433.100
99.330.362
63.383.000
63.414.000
64.203.000
64.204.000
63.381.000
63.379.000
63.410.000
63.388.000
99.307.814
99.333.115
63.380.000
99.302.306
63.405.000
63.374.000
99.330.362
63.377.100
63.373.200
63.413.000
99.451.838
99.307.810
99.333.110
99.302.258
63.400.000
99.330.312
63.386.000
99.333.115
85 001
85 015

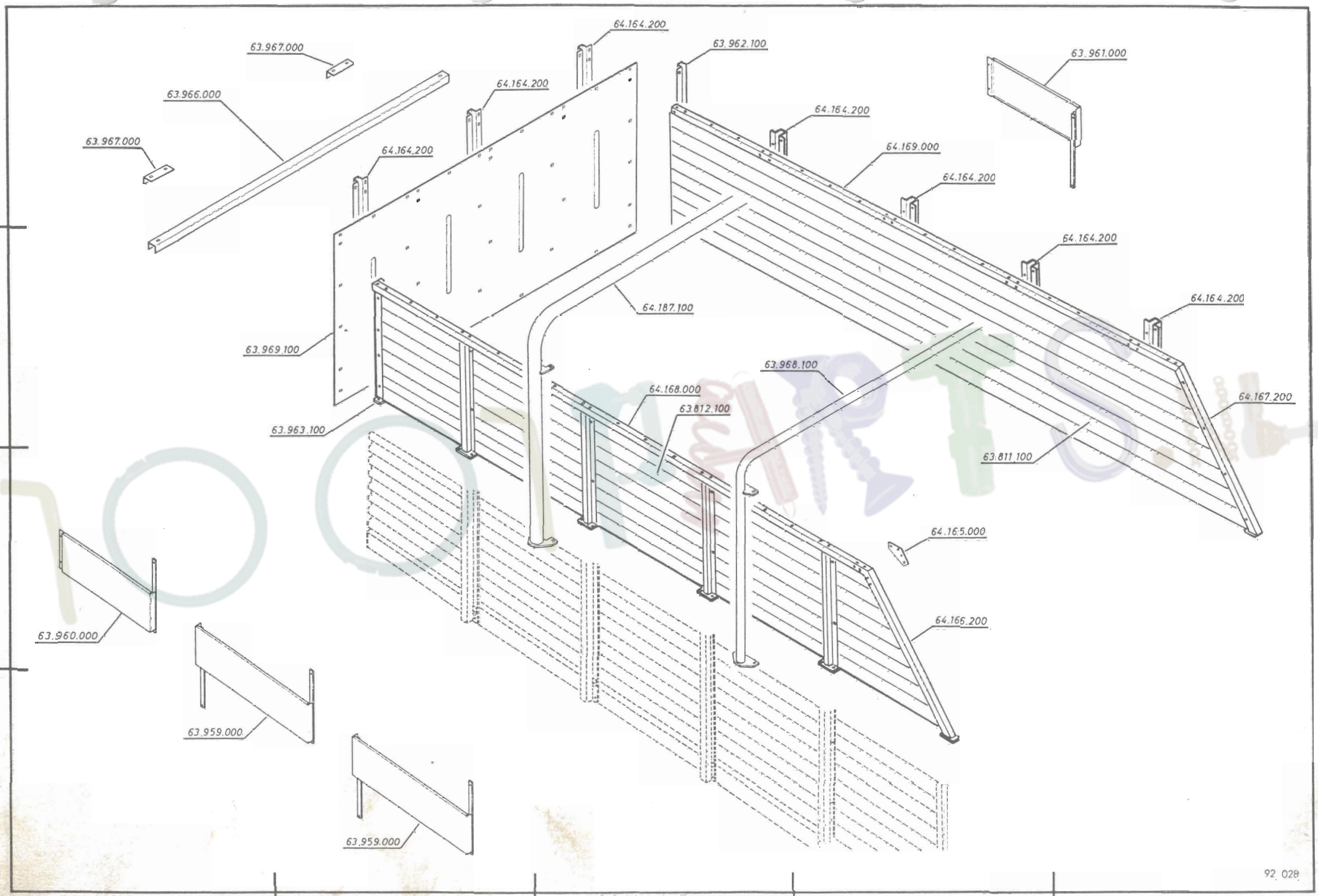
63.967.000
63.966.000
63.967.000
64.164.200
64.164.200
64.164.200
63.962.100
64.164.200
64.169.000
64.164.200
63.961.000
64.164.200
64.164.200
64.187.100
63.969.100
63.968.100
64.168.000
63.812.100
63.963.100
64.167.200
63.811.100
64.165.000
64.166.200
63.960.000
63.959.000
63.959.000
a
b
c
d
1
2
3
4
5
13A
92.028

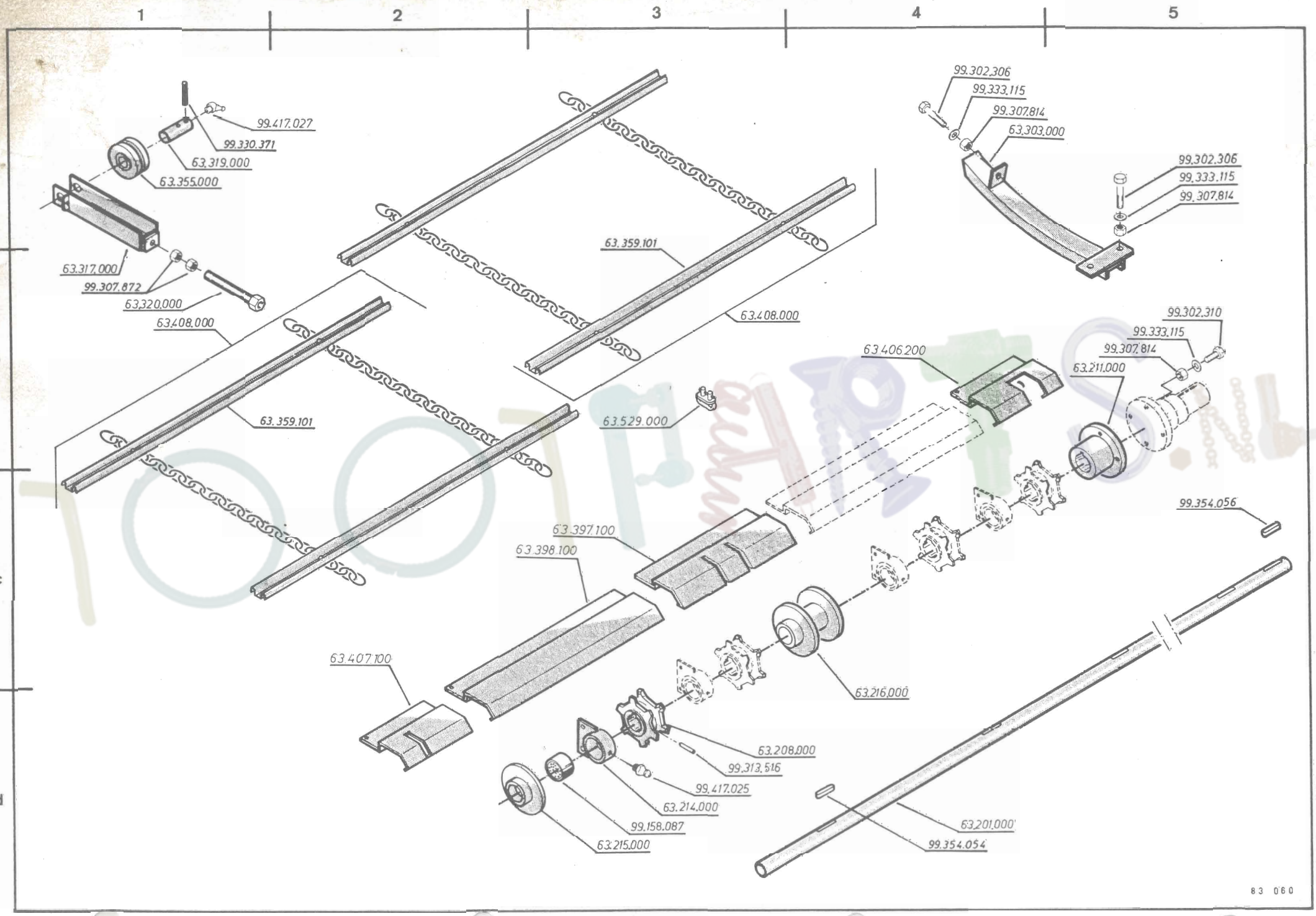
1
2
3
4
5
a
b
c
d
14 A
99.417.027
99.330.371
63.319.000
63.355.000
63.317.000
99.307.872
63.320.000
63.408.000
63.359.101
63.408.000
63.359.101
63.529.000
99.302.306
99.333.115
99.307.814
63.303.000
99.302.306
99.333.115
99.307.814
99.302.310
99.333.115
99.307.814
63.406.200
63.211.000
99.354.056
63.397.100
63.398.100
63.407.100
63.216.000
63.208.000
99.313.516
99.417.025
63.214.000
99.158.087
63.215.000
63.201.000
99.354.054
83 060

63.515.000

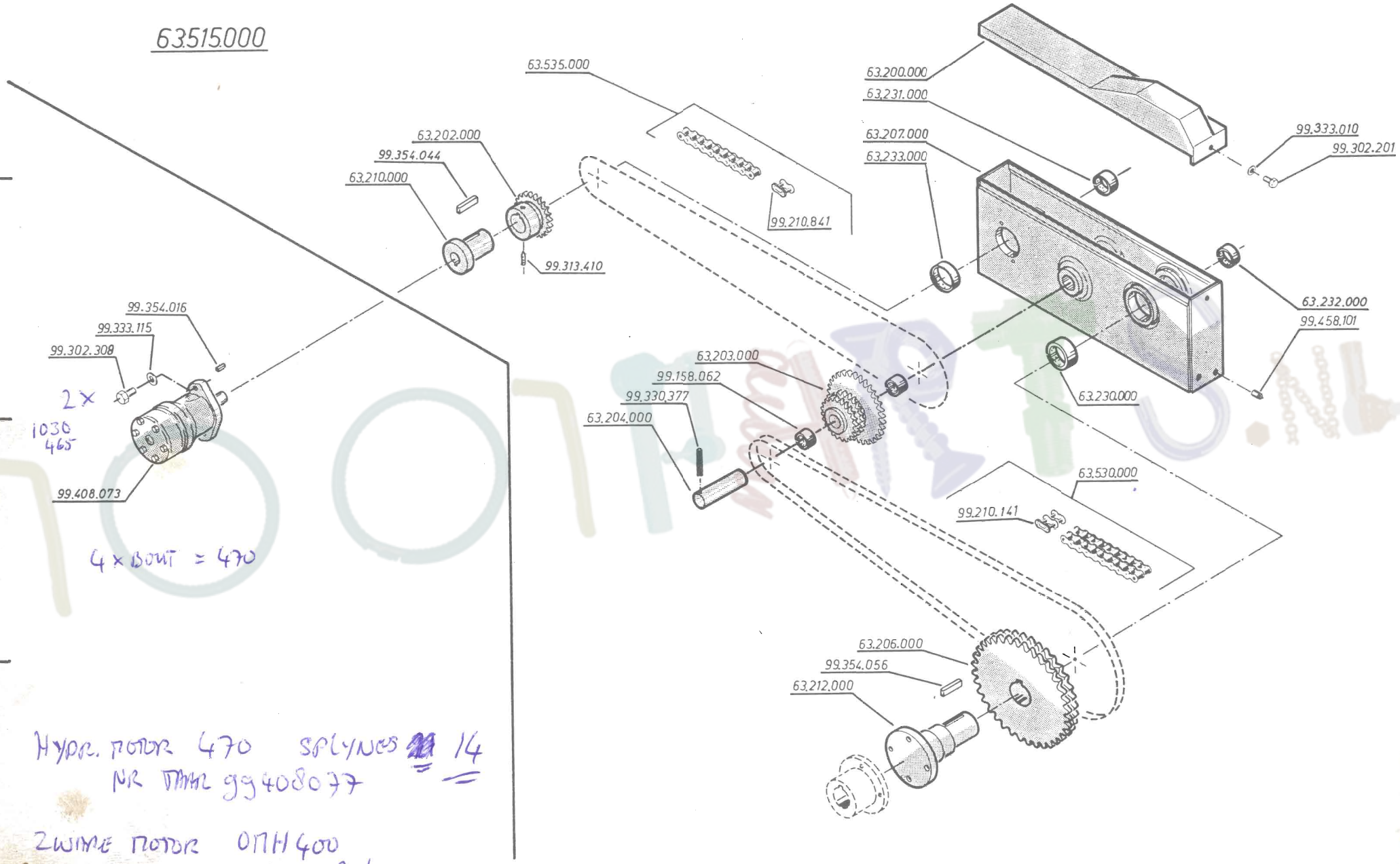

HYDR. MOTOR 470 SPLYNES 14
NR MAR 99408077

ZWIME MOTOR OMH 400
20 LTR 8 kan

83 082

15A

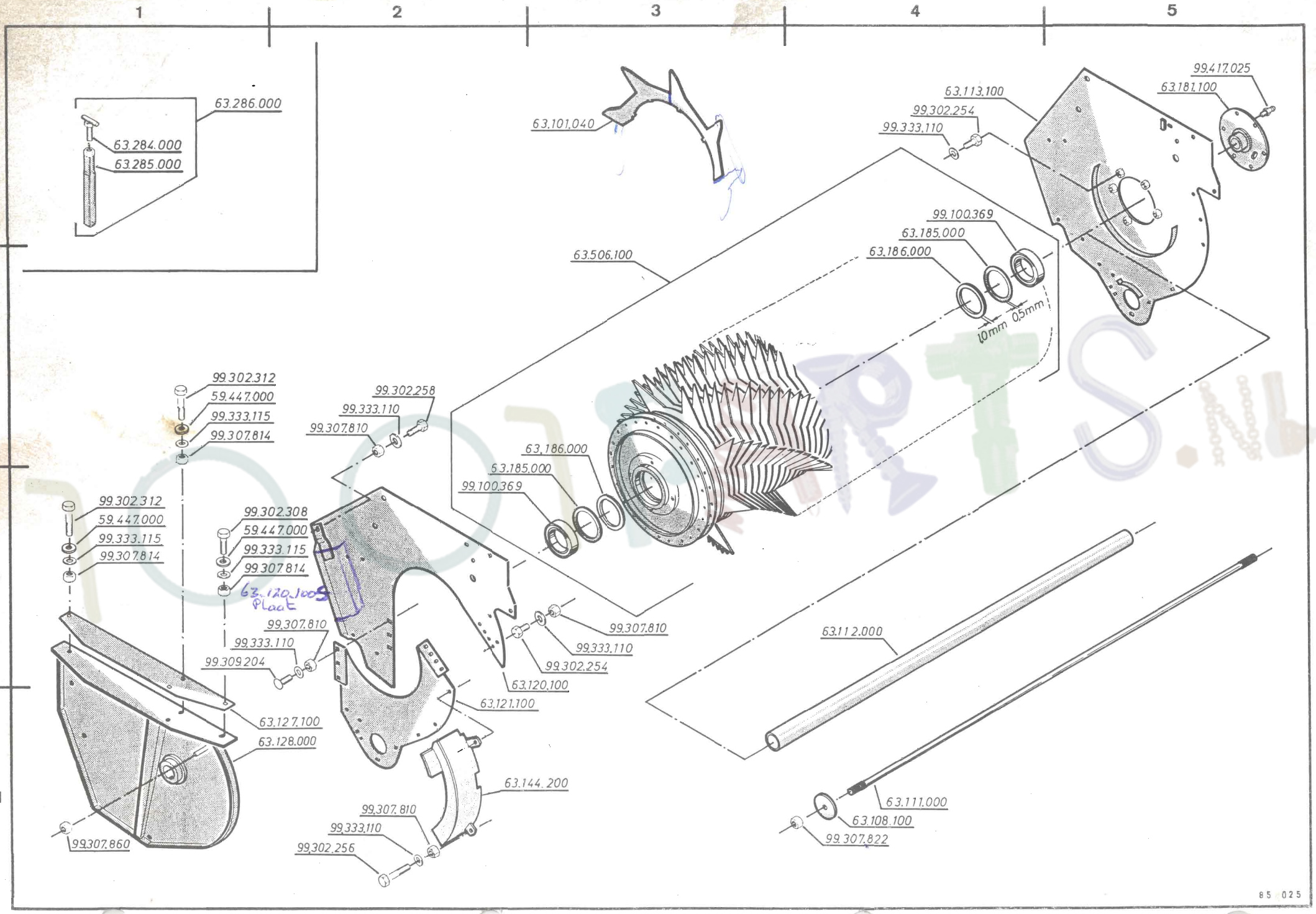
1
2
3
4
5
a
b
c
d
63.286.000
63.284.000
63.285.000
63.101.040
63.113.100
99.302.254
99.333.110
99.417.025
63.181.100
99.100.369
63.185.000
63.186.000
63.506.100
10mm
0,5mm
99.302.312
59.447.000
99.333.115
99.307.814
99.302.258
99.333.110
99.307.810
63.186.000
63.185.000
99.100.369
99.302.312
59.447.000
99.333.115
99.307.814
99.302.308
59.447.000
99.333.115
99.307.814
63.120.100S
Plaat
99.307.810
99.333.110
99.309.204
99.307.810
99.333.110
99.302.254
63.120.100
63.121.100
63.112.000
63.127.100
63.128.000
63.144.200
99.307.860
99.307.810
99.333.110
99.302.256
63.111.000
63.108.100
99.307.822
85 025

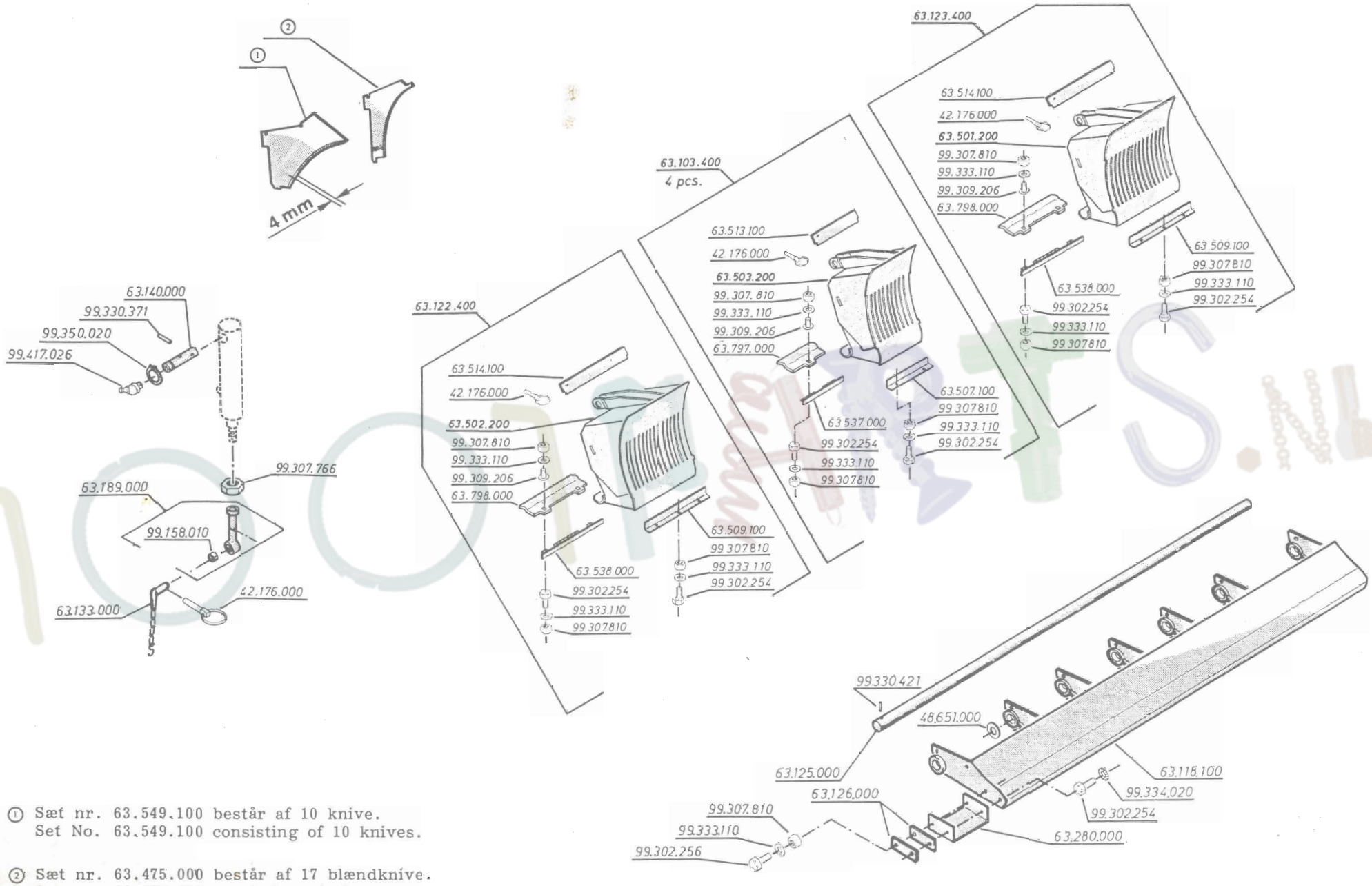

① Sæt nr. 63.549.100 består af 10 knive.
Set No. 63.549.100 consisting of 10 knives.

② Sæt nr. 63.475.000 består af 17 blændknive.
Set No. 63.475.000 consisting of 17 dummy knives.

85 016 85 017

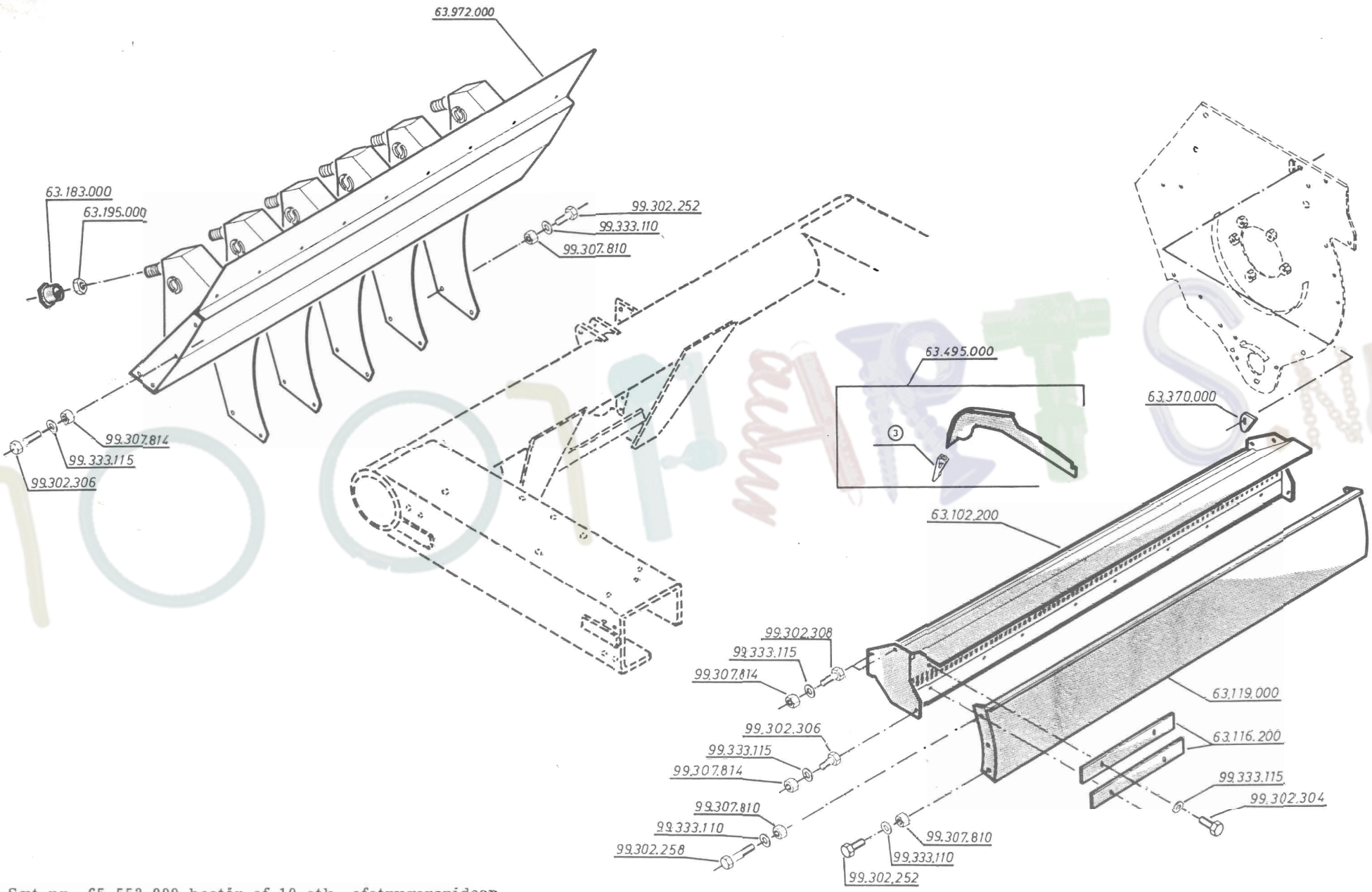

③ Sæt nr. 65.553.000 består af 10 stk. afstrygerspidser.
Set No. 65.553.000 consisting of 10 pcs. deflector points.

85 016 85 017

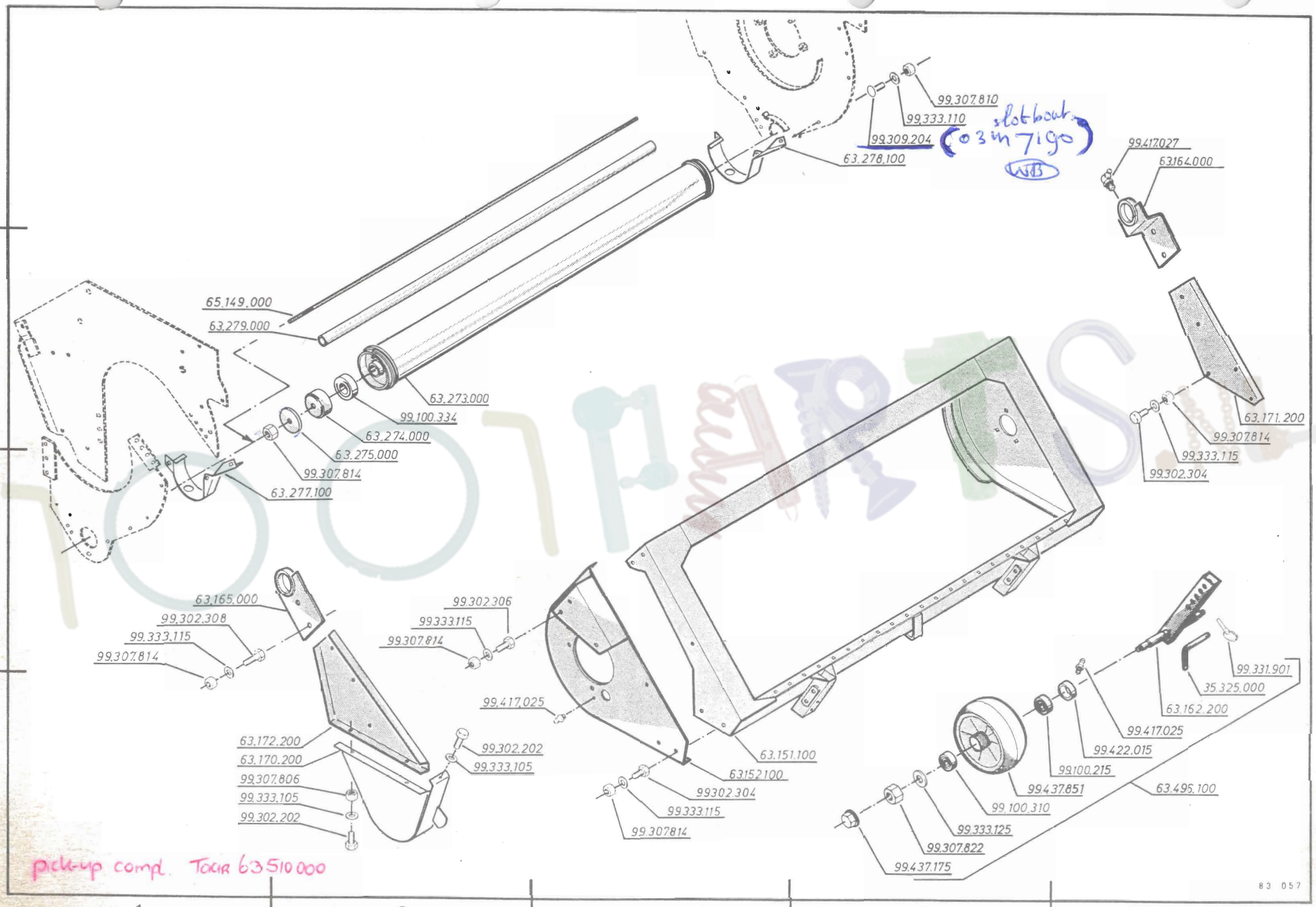
99.307.810
99.333.110
99.309.204
63.278.100
slotbout
(03 m 7190)
WB
99.417.027
63.164.000
65.149.000
63.279.000
63.273.000
99.100.334
63.274.000
63.275.000
99.307.814
63.277.100
63.171.200
99.307.814
99.333.115
99.302.304
63.165.000
99.302.308
99.333.115
99.307.814
99.302.306
99.333.115
99.307.814
99.417.025
63.172.200
63.170.200
99.307.806
99.333.105
99.302.202
99.302.202
99.333.105
63.151.100
63.152.100
99.302.304
99.333.115
99.307.814
99.331.901
35.325.000
63.162.200
99.417.025
99.422.015
99.100.215
99.437.851
99.100.310
99.333.125
99.307.822
99.437.175
63.495.100
pick-up comp. Tokir 63510000
83 057
19A
1
2
3
4
5

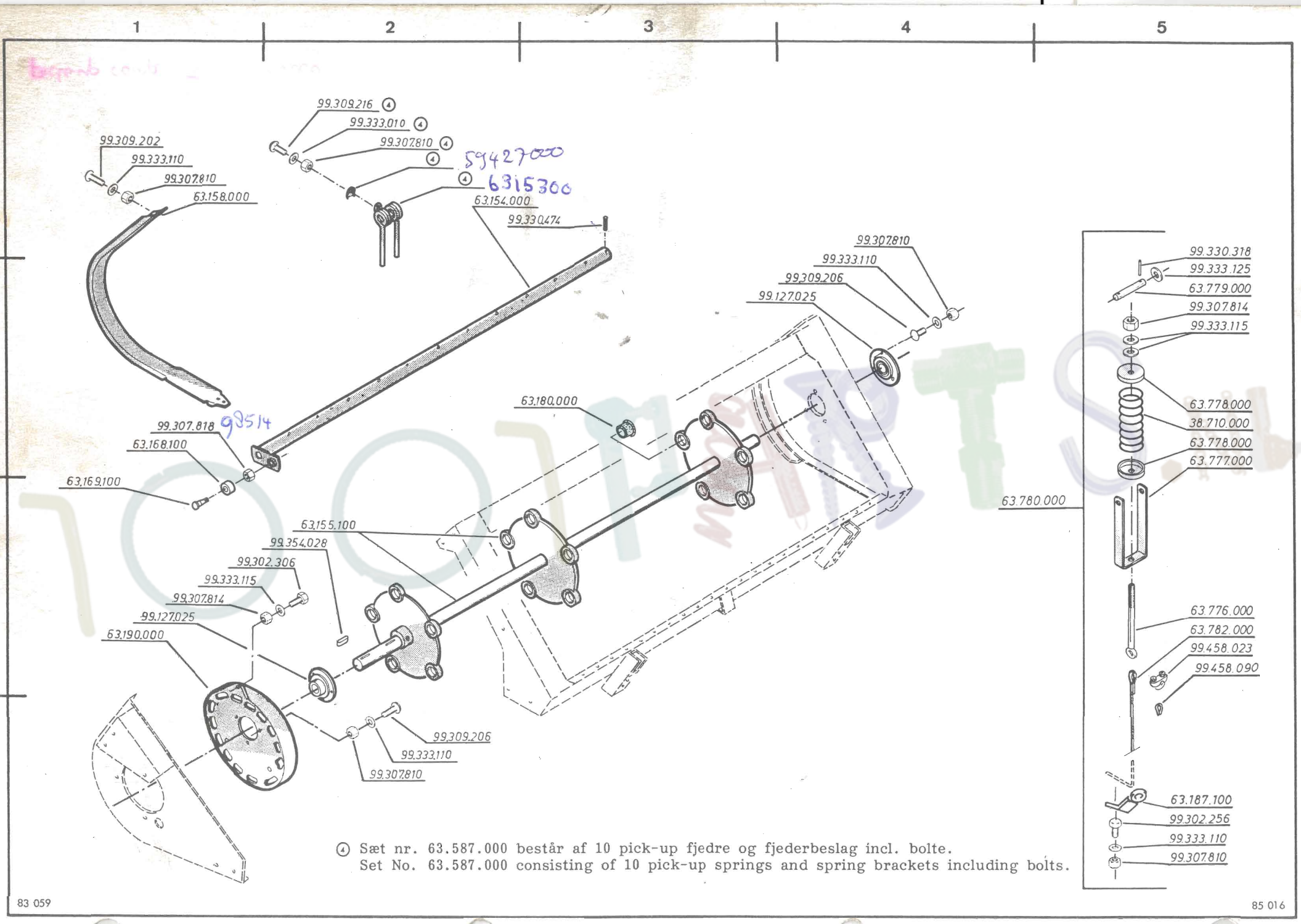

④ Sæt nr. 63.587.000 består af 10 pick-up fjedre og fjederbeslag incl. bolte.
Set No. 63.587.000 consisting of 10 pick-up springs and spring brackets including bolts.

83 059

85 016

(5) Sæt nr. 63.586.000 består af 22 kædehjulssegmenter incl. bolte.
Set No. 63.586.000 consisting of 22 chain wheel segments including bolts.

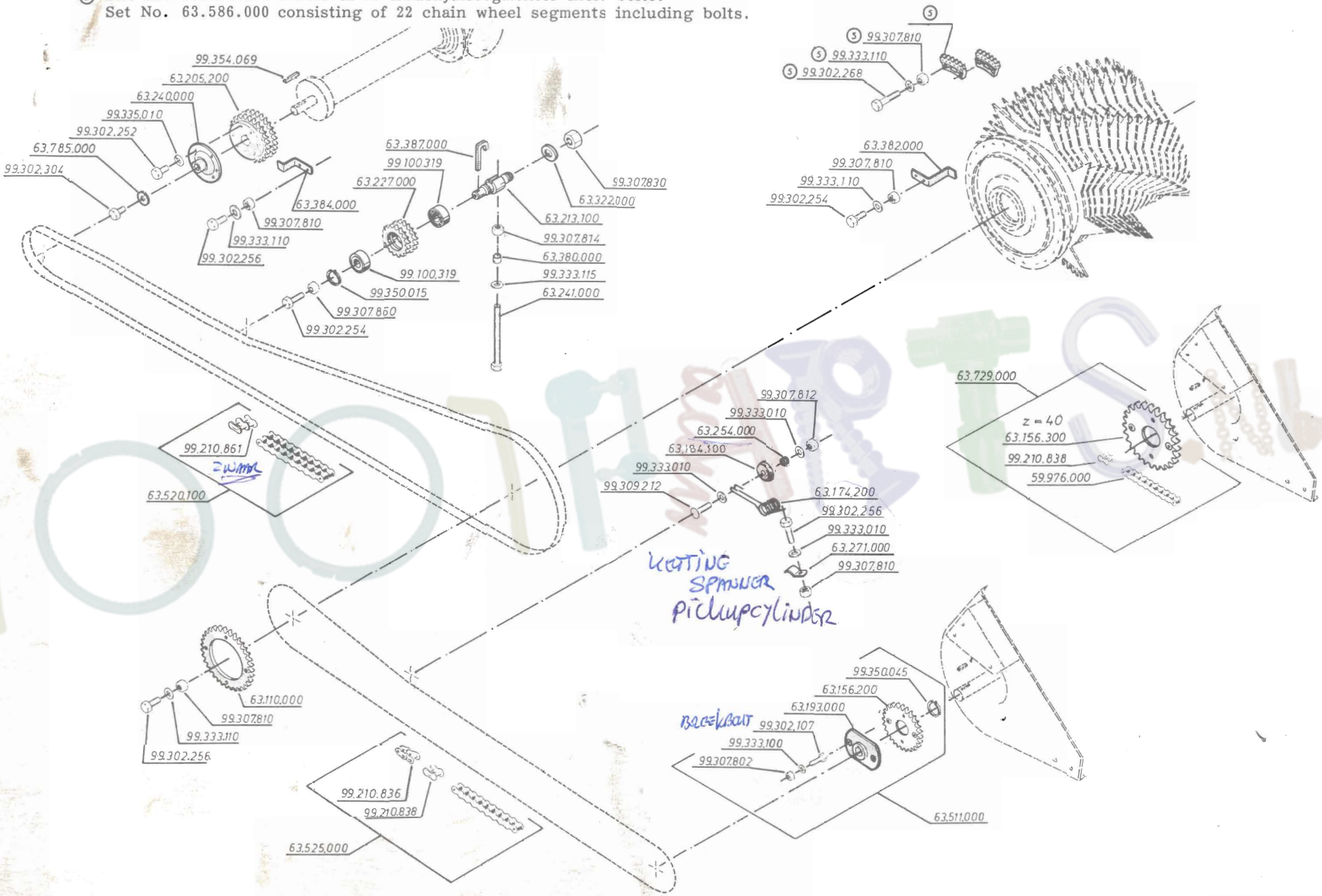

63 058

21 A

Compl. No. 99.250.870

P.T.O. 540 min^{-1}

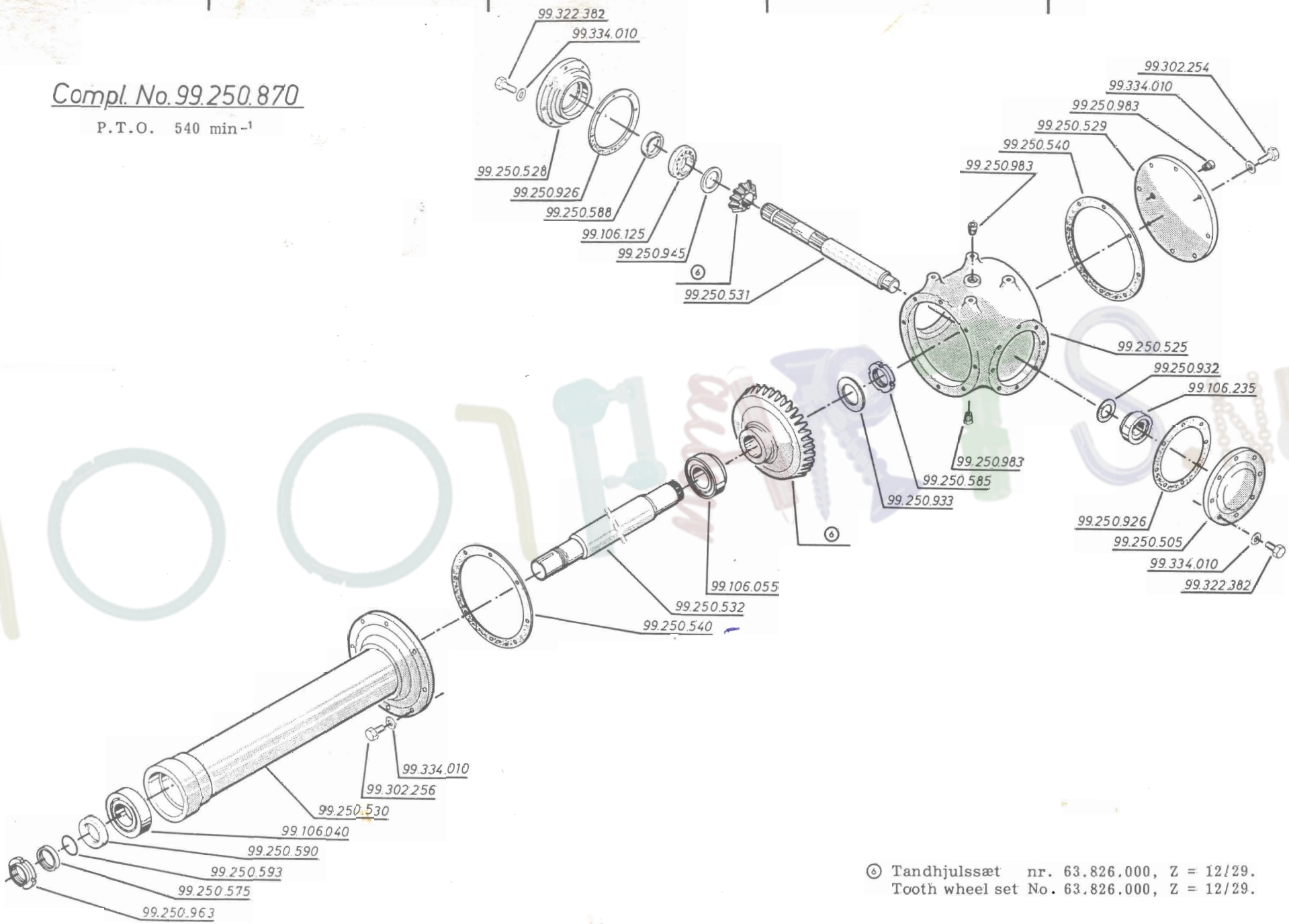

⑥ Tandhjulssæt nr. 63.826.000, Z = 12/29.
Tooth wheel set No. 63.826.000, Z = 12/29.

88 050

Compl. No. 99.250.871

P.T.O. = 1000 min⁻¹

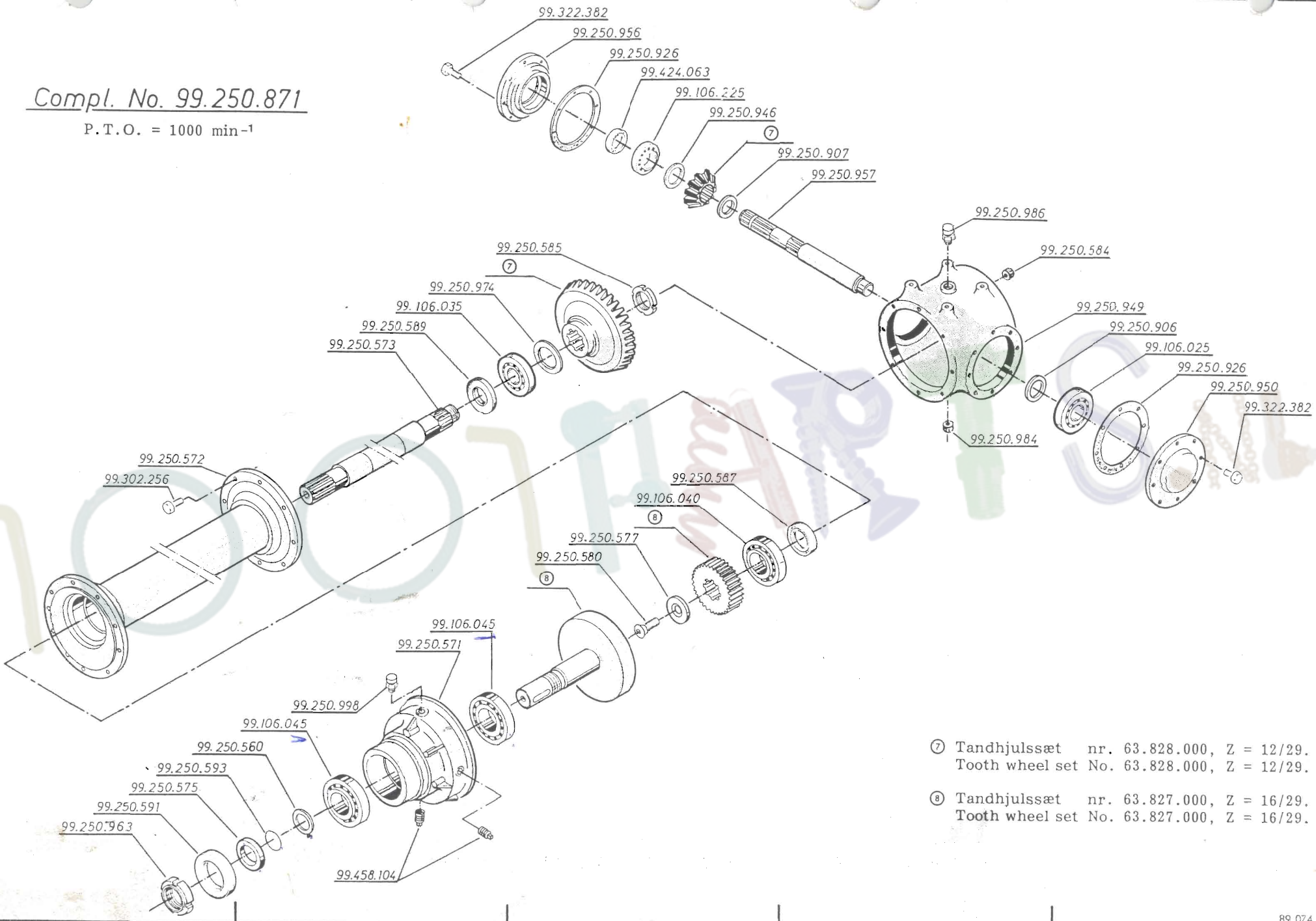

7 Tandhjulssæt nr. 63.828.000, Z = 12/29.
Tooth wheel set No. 63.828.000, Z = 12/29.

8 Tandhjulssæt nr. 63.827.000, Z = 16/29.
Tooth wheel set No. 63.827.000, Z = 16/29.

89 074

1 2 3 4 5

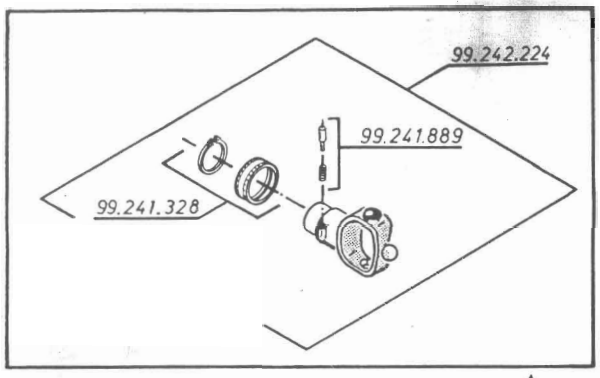

99.240.283

P.T.O. 1000 min^{-1} (21 splines) and friction = 1700 Nm

+ page 25 A

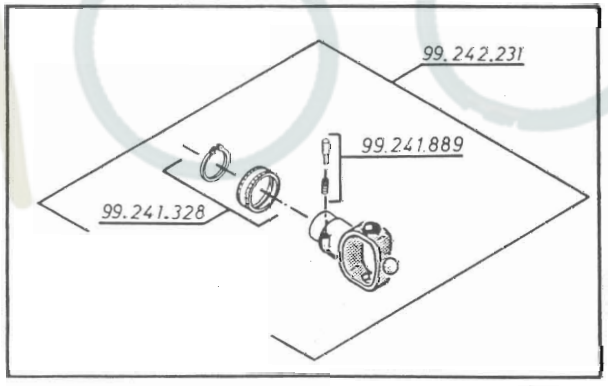

99.240.282

P.T.O. 540 min^{-1} (6 splines) and friction = 2500 Nm

+ page 25 A

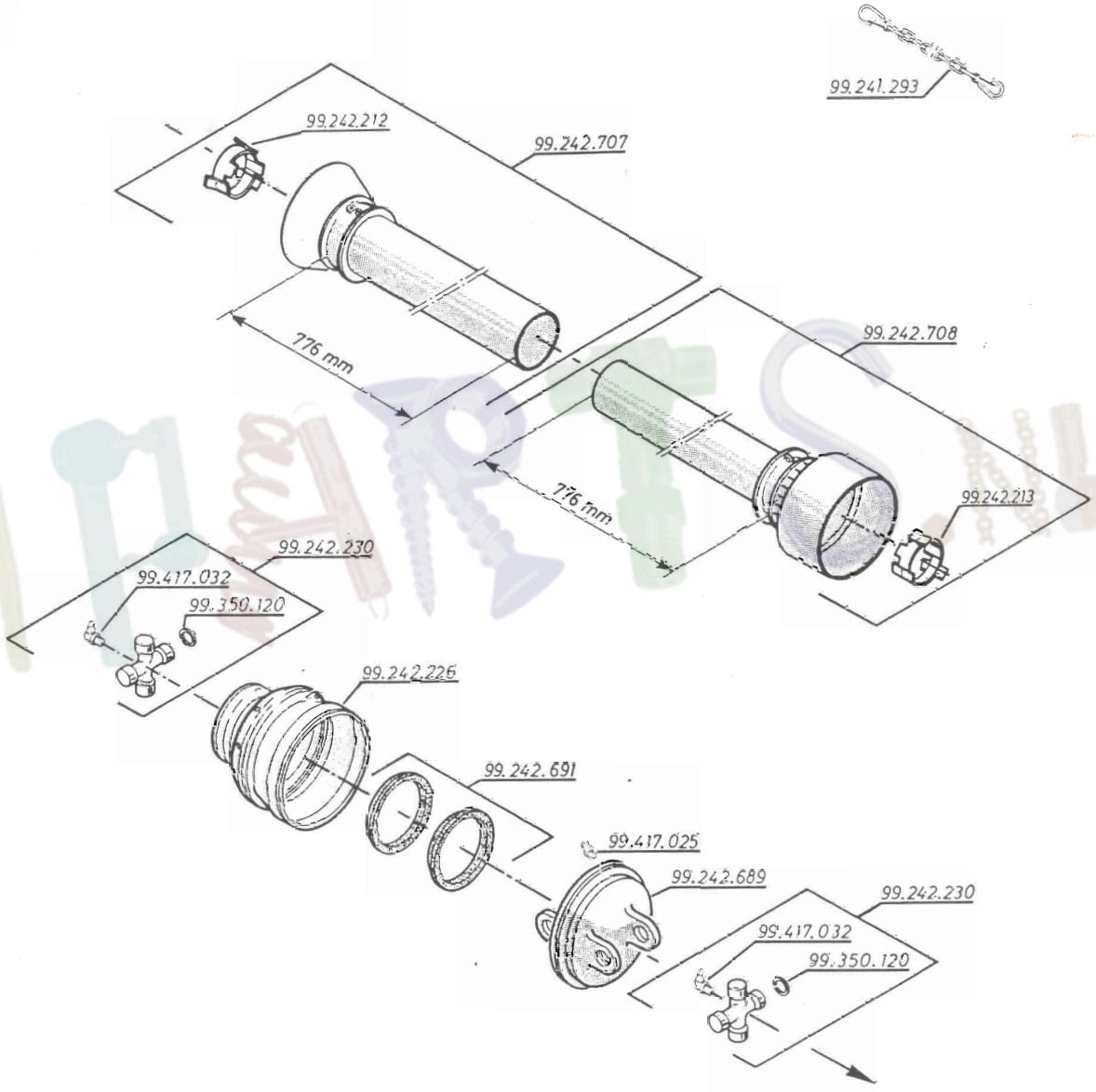

see page 25 A

90 078

2500 Nm = Bypy 7I656101F401
1700 Nm = Bypy 7F656101CE26

Taamp oog = ½ Aftakas 1700 Nm 1000 min⁻¹

see page 24A

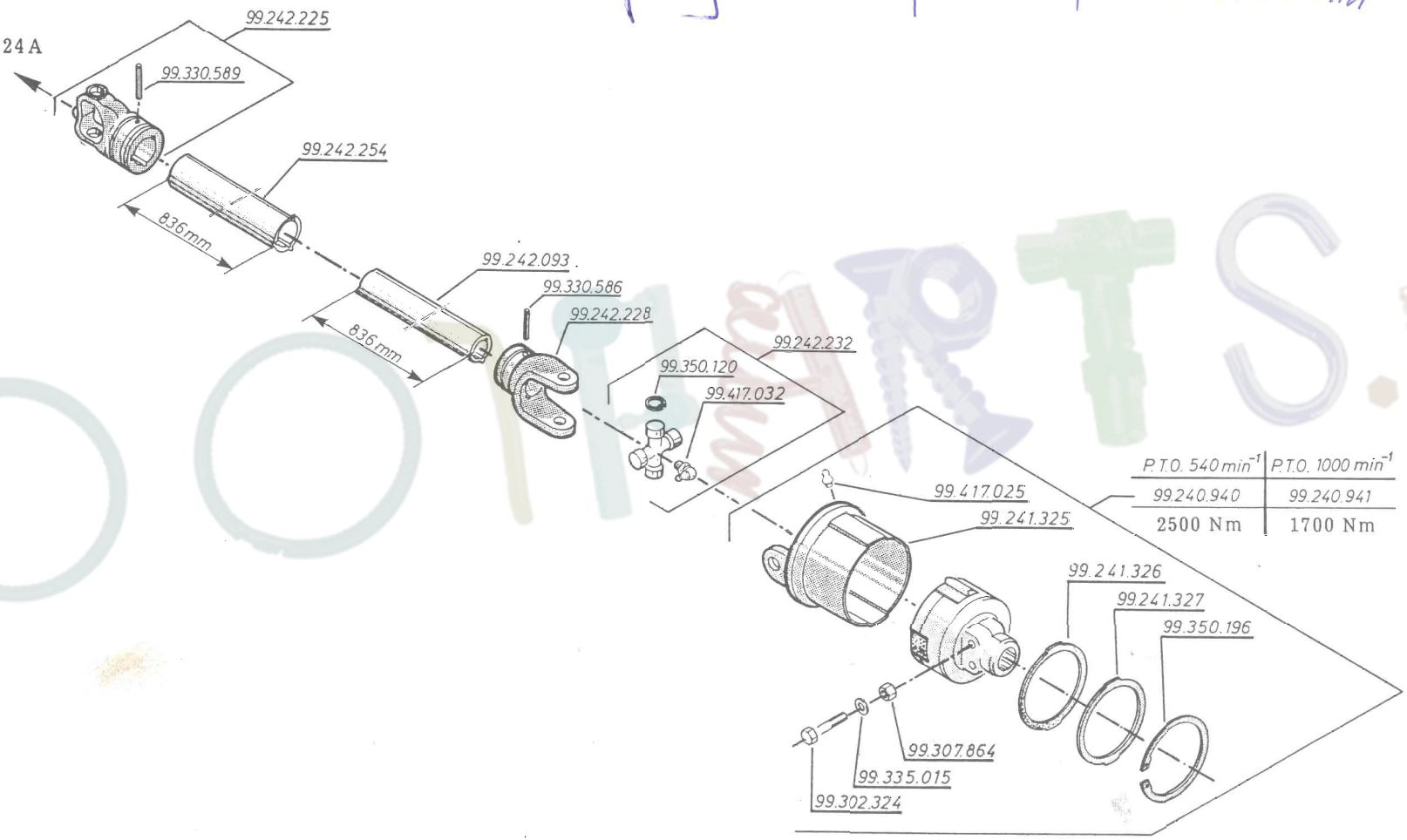

P.T.O. 540 min⁻¹	P.T.O. 1000 min⁻¹
99.240.940	99.240.941
2500 Nm	1700 Nm

83 069

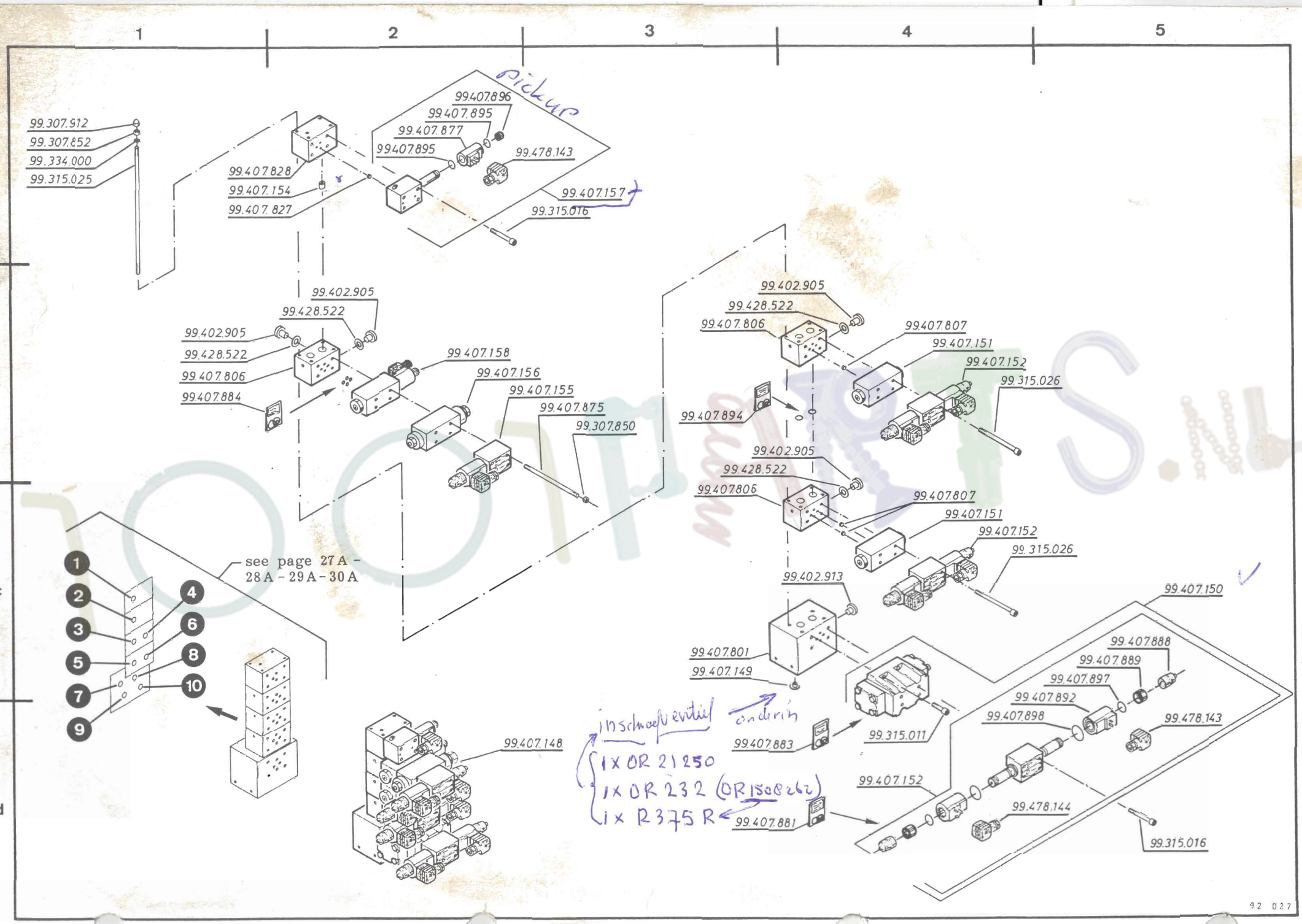
1
2
3
4
5
a
b
c
d
pickup
99.407.896
99.407.895
99.407.877
99.407.895
99.478.143
99.307.912
99.307.852
99.334.000
99.315.025
99.407.828
99.407.154
99.407.827
99.407.157
99.315.016
99.402.905
99.428.522
99.402.905
99.428.522
99.407.806
99.407.884
99.407.158
99.407.156
99.407.155
99.407.875
99.307.850
99.402.905
99.428.522
99.407.806
99.407.807
99.407.151
99.407.152
99.315.026
99.407.894
99.402.905
99.428.522
99.407.806
99.407.807
99.407.151
99.407.152
99.315.026
99.402.913
99.407.150
see page 27A - 28A - 29A - 30A
1
2
3
4
5
6
7
8
9
10
99.407.801
99.407.149
99.407.888
99.407.889
99.407.897
99.407.892
99.407.898
99.478.143
99.407.148
inschroefventiel
onderin
1 x OR 21250
1 x OR 232 (OR 15082 62)
1 x R 375 R
99.407.883
99.315.011
99.407.152
99.407.881
99.478.144
99.315.016
92 027

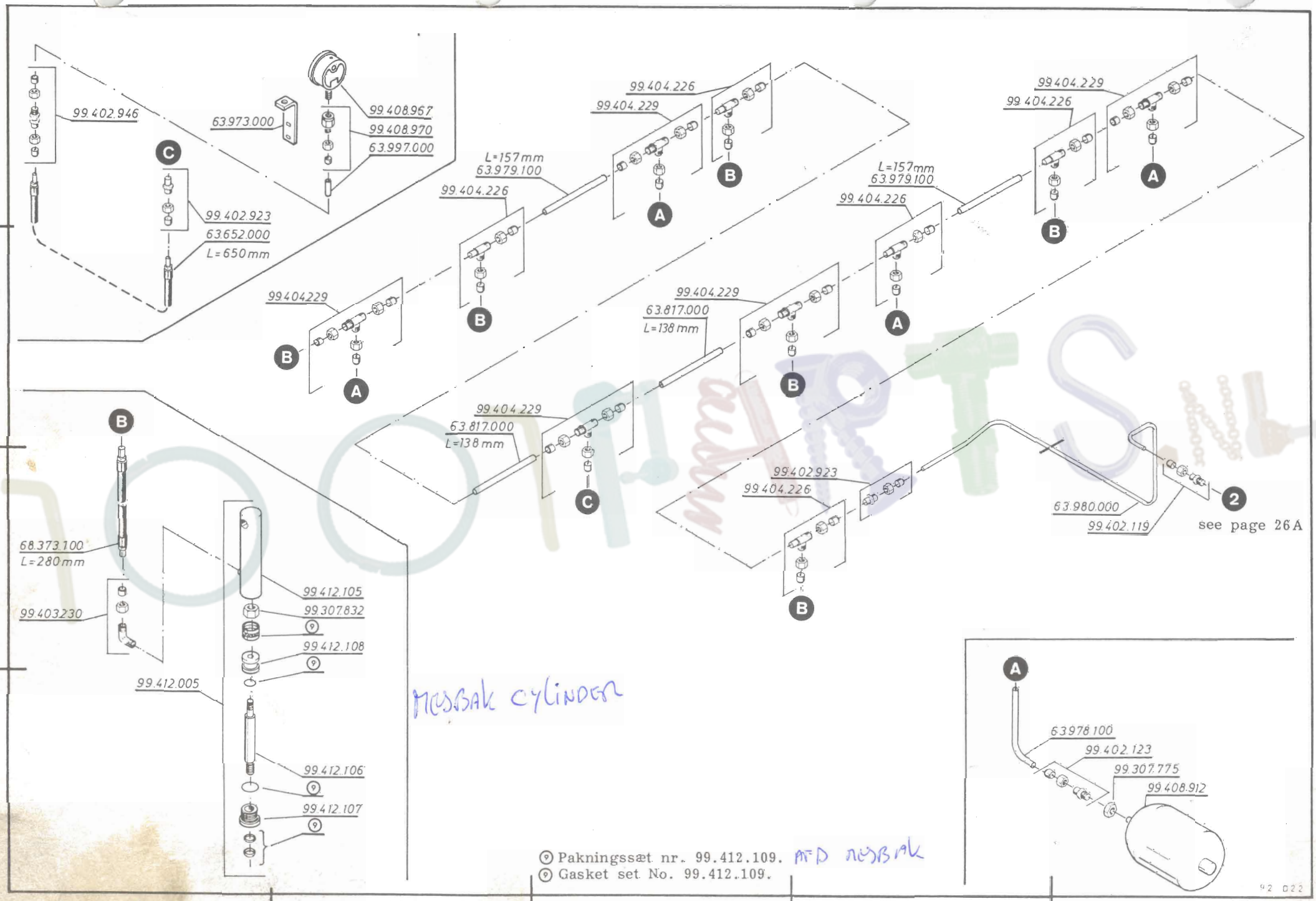
99.402.946
63.973.000
99.408.967
99.408.970
63.997.000
C
99.402.923
63.652.000
L=650mm
99.404.226
99.404.229
L=157mm
63.979.100
99.404.226
99.404.229
99.404.226
99.404.229
L=157mm
63.979.100
99.404.226
99.404.229
63.817.000
L=138 mm
99.404.229
63.817.000
L=138 mm
99.402.923
99.404.226
63.980.000
99.402.119
2
see page 26A
68.373.100
L=280mm
99.403.230
99.412.105
99.307.832
99.412.108
99.412.005
99.412.106
99.412.107
MESSBAK CYLINDER
63.978.100
99.402.123
99.307.775
99.408.912
Pakningssæt nr. 99.412.109. MED MESSBAK
Gasket set No. 99.412.109.
92 022

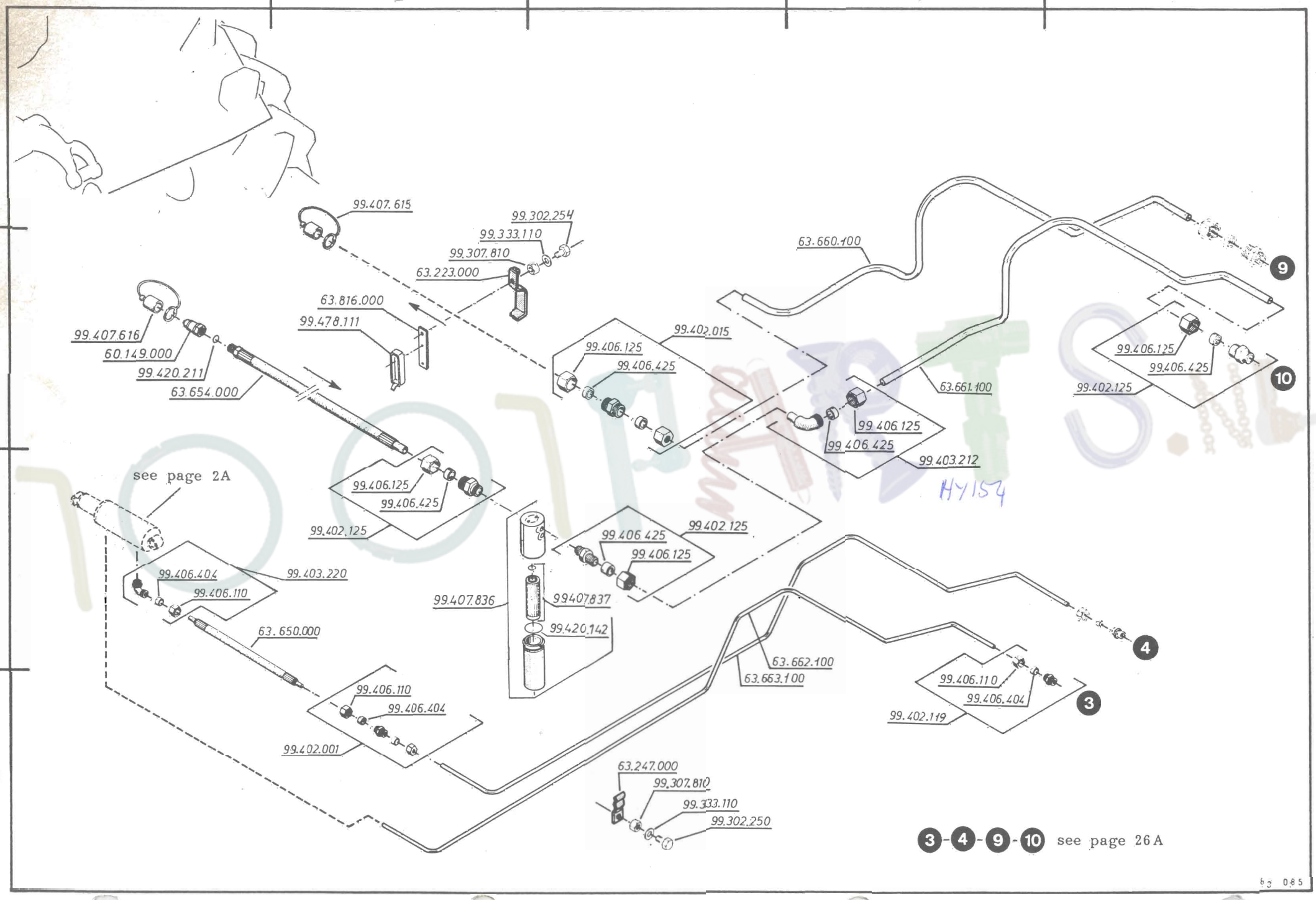
1
2
3
4
5
a
b
c
d
99.407.615
99.302.254
99.333.110
99.307.810
63.223.000
63.816.000
99.478.111
99.407.616
60.149.000
99.420.211
63.654.000
99.402.015
99.406.125
99.406.425
63.660.100
63.661.100
99.406.125
99.406.425
99.403.212
99.402.125
99.406.125
99.406.425
99.402.125
see page 2A
99.406.404
99.406.110
99.403.220
99.407.836
99.407.837
99.420.142
99.406.425
99.406.125
99.402.125
63.650.000
99.406.110
99.406.404
99.402.001
63.662.100
63.663.100
99.406.110
99.406.404
99.402.119
63.247.000
99.307.810
99.333.110
99.302.250
3-4-9-10 see page 26 A
HY154

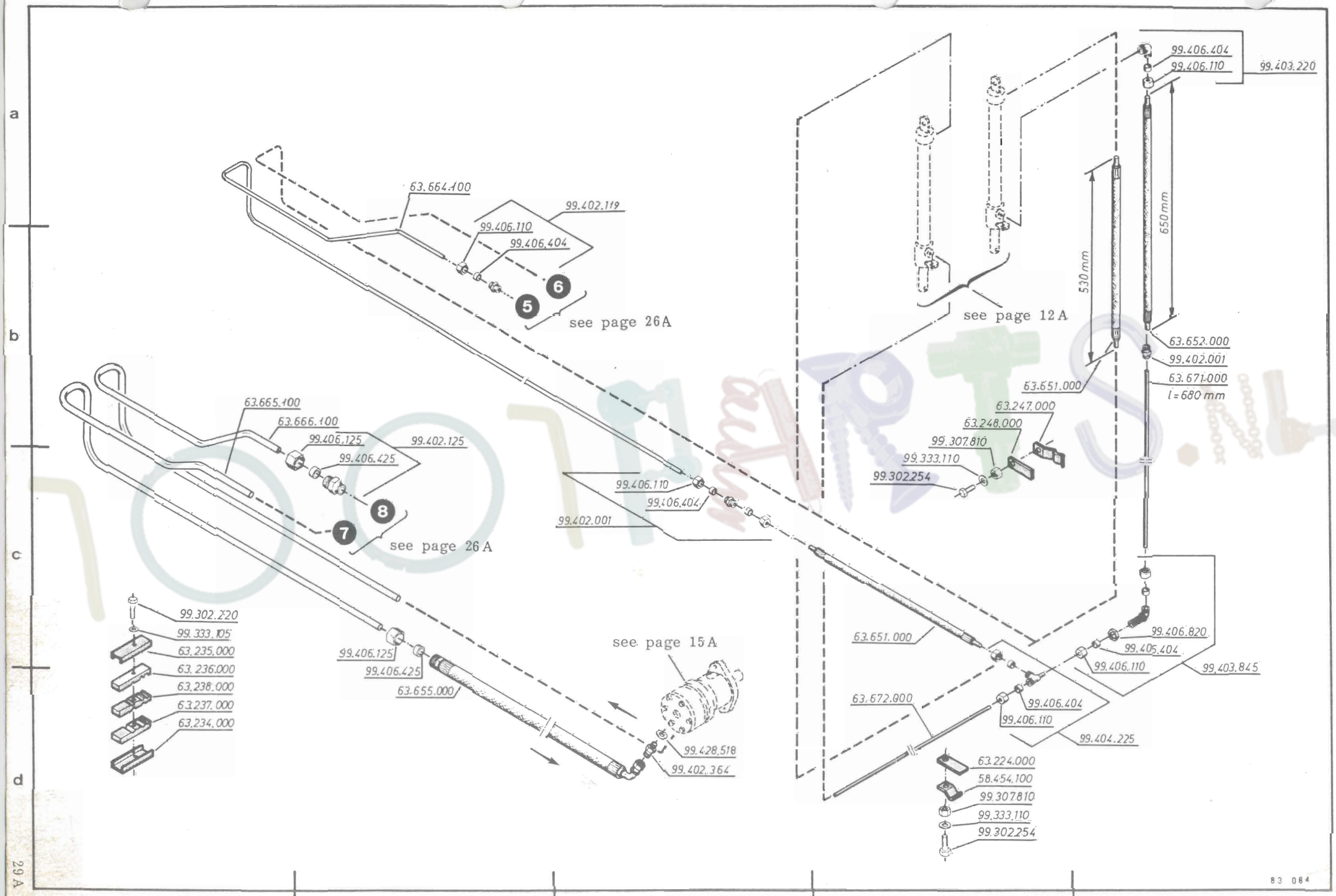
63.664.100
99.402.119
99.406.110
99.406.404
6
5
see page 26A
63.665.100
63.666.100
99.406.125
99.402.125
99.406.425
8
7
see page 26 A
99.406.110
99.406.404
99.402.001
see page 12 A
530 mm
650 mm
99.406.404
99.406.110
99.403.220
63.652.000
99.402.001
63.671.000
l = 680 mm
63.651.000
63.247.000
63.248.000
99.307.810
99.333.110
99.302.254
99.302.220
99.333.105
63.235.000
63.236.000
63.238.000
63.237.000
63.234.000
99.406.125
99.406.425
63.655.000
see page 15 A
99.428.518
99.402.364
63.651.000
63.672.000
99.406.820
99.405.404
99.406.110
99.403.845
99.406.404
99.406.110
99.404.225
63.224.000
58.454.100
99.307.810
99.333.110
99.302.254
83 084

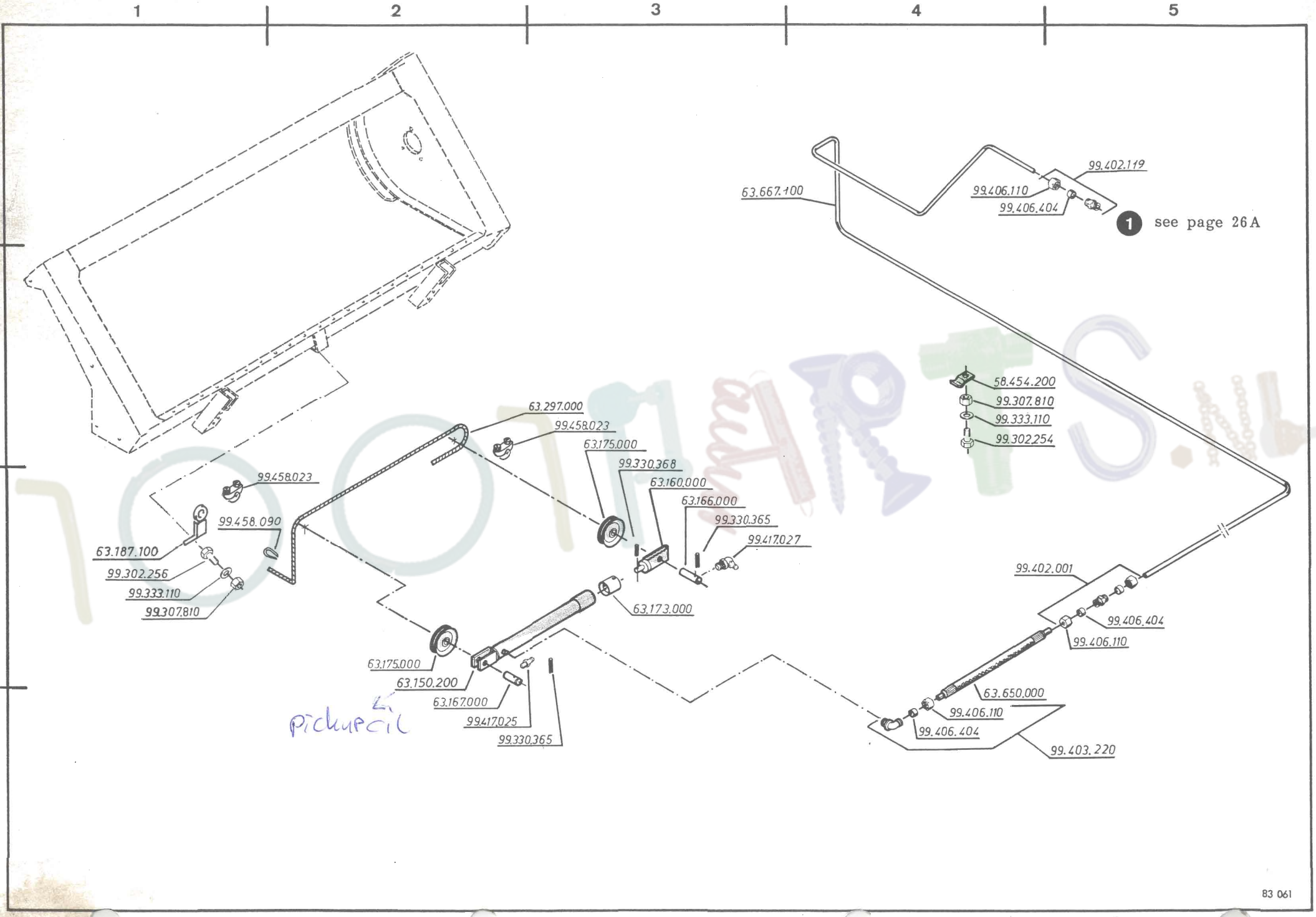
1
2
3
4
5
a
b
c
d
63.667.100
99.402.119
99.406.110
99.406.404
1 see page 26 A
58.454.200
99.307.810
99.333.110
99.302.254
63.297.000
99.458.023
63.175.000
99.330.368
63.160.000
63.166.000
99.330.365
99.417.027
99.458.023
99.458.090
63.187.100
99.302.256
99.333.110
99.307.810
63.173.000
99.402.001
99.406.404
99.406.110
63.175.000
63.150.200
63.167.000
99.417.025
99.330.365
pickupcil
63.650.000
99.406.110
99.406.404
99.403.220
83 061

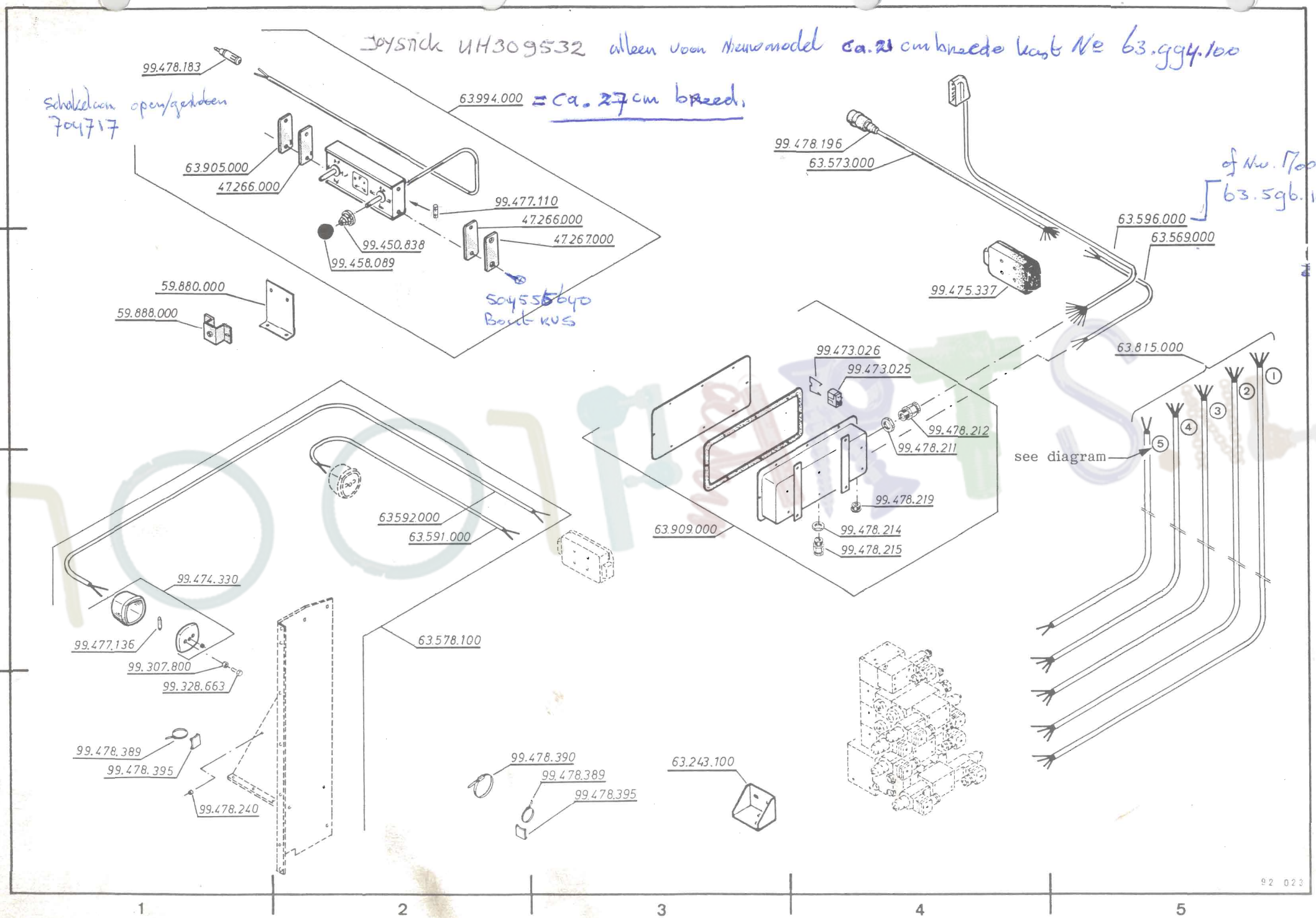
Joystick UH309532 alleen voor Nieuwmodel ca. 21 cm breede kast Nr 63.994.100
99.478.183
schakelaar open/gesloten 704717
63.994.000 = ca. 27 cm breed.
63.905.000
47.266.000
99.477.110
47.266.000
47.267.000
99.450.838
99.458.089
504555640 Bout KVS
59.880.000
59.888.000
99.478.196
63.573.000
of Nw. Model 63.596.100
63.596.000
63.569.000
99.475.337
63.815.000
99.473.026
99.473.025
99.478.212
99.478.211
99.478.219
99.478.214
99.478.215
63.909.000
see diagram
63.592.000
63.591.000
99.474.330
99.477.136
99.307.800
99.328.663
63.578.100
99.478.389
99.478.395
99.478.240
99.478.390
99.478.389
99.478.395
63.243.100
92 023
31A
1
2
3
4
5

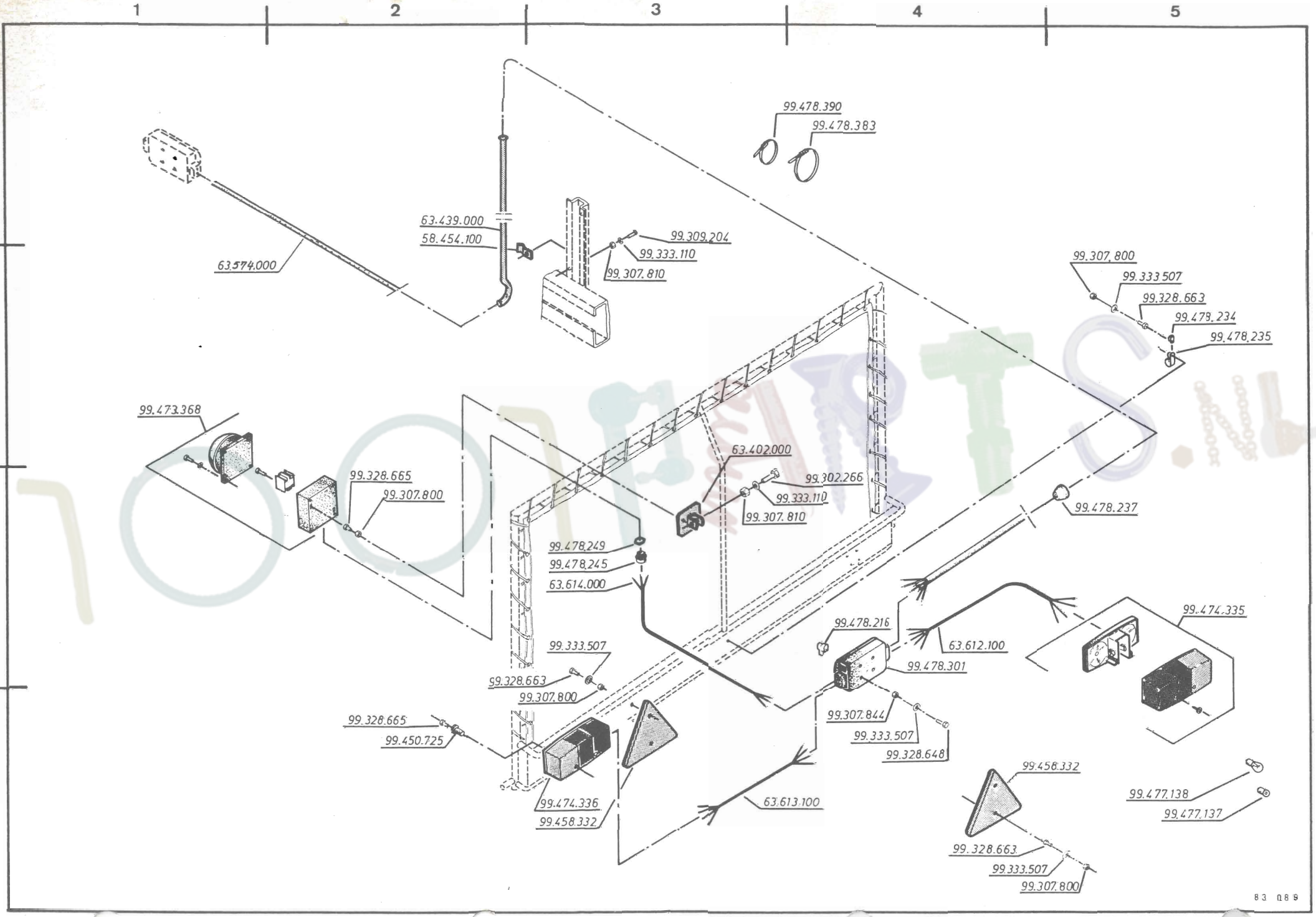
32 A
1
2
3
4
5
a
b
c
d
99.478.390
99.478.383
63.439.000
58.454.100
63.574.000
99.309.204
99.333.110
99.307.810
99.307.800
99.333.507
99.328.663
99.479.234
99.478.235
99.473.368
99.328.665
99.307.800
63.402.000
99.302.266
99.333.110
99.307.810
99.478.237
99.478.249
99.478.245
63.614.000
99.478.216
63.612.100
99.474.335
99.478.301
99.333.507
99.328.663
99.307.800
99.307.844
99.333.507
99.328.648
99.328.665
99.450.725
99.474.336
99.458.332
63.613.100
99.458.332
99.477.138
99.477.137
99.328.663
99.333.507
99.307.800
83 089

Compl. No. 63.677.100

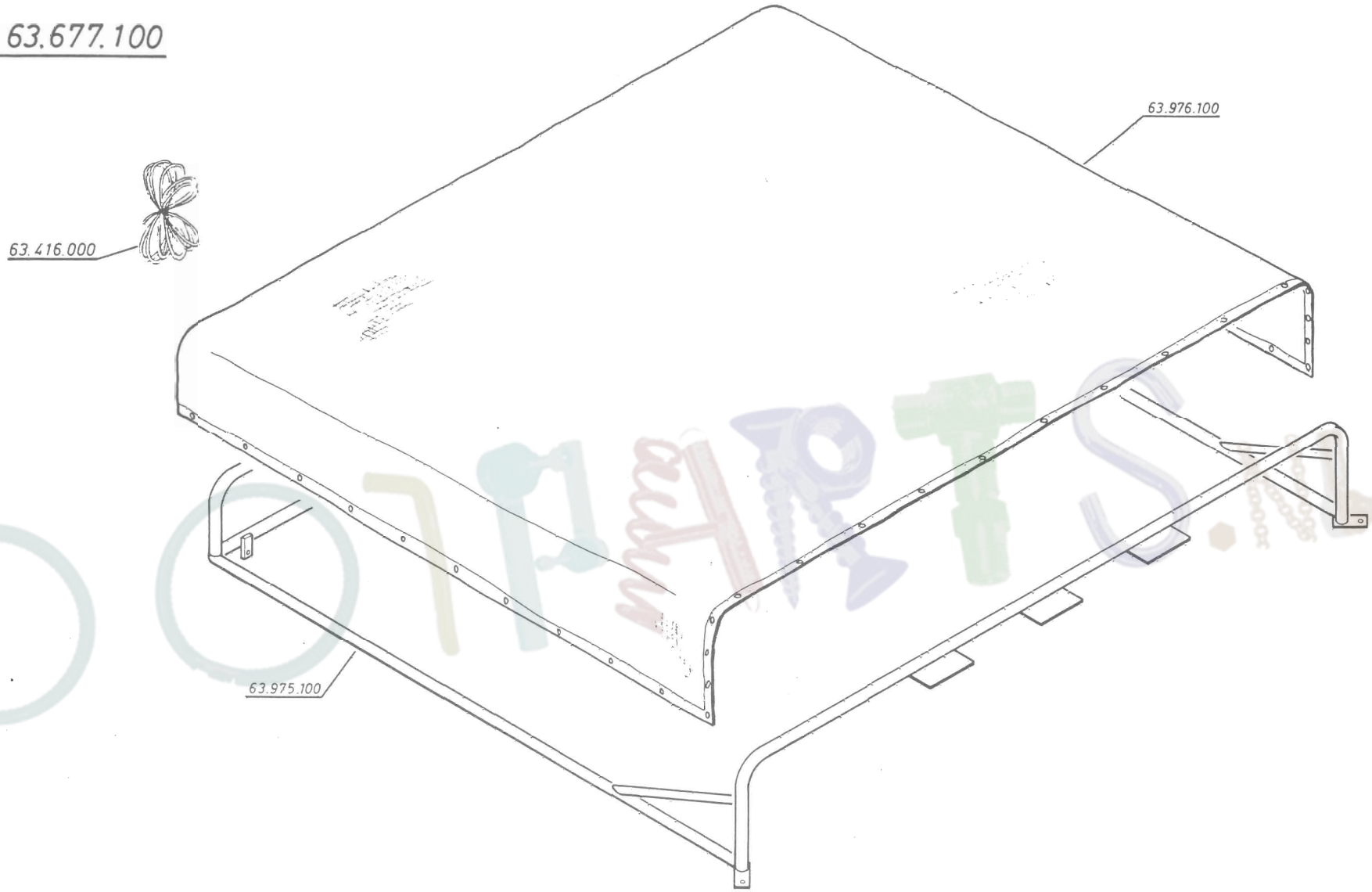

84 056

Compl. No.	A	B	C
63.450 100	1		
63.468.100	1		1
63.442.100		1	1

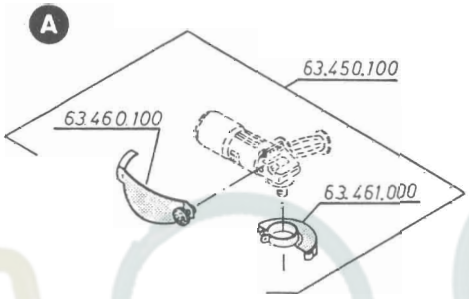

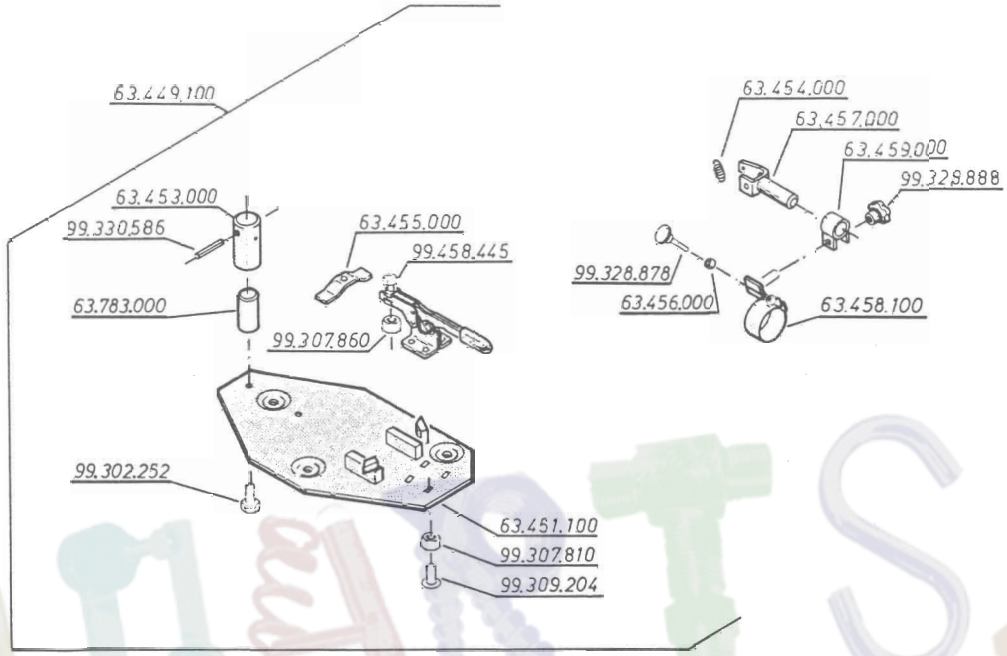

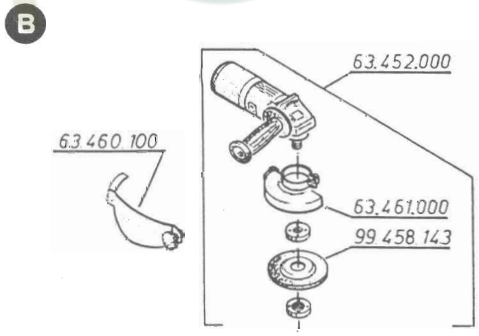

63.743.000

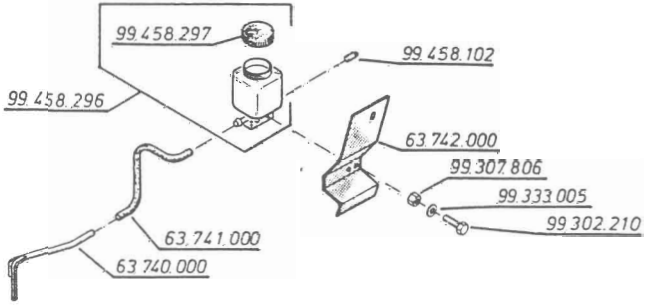

84 056

Del nr. Part No.	Antal Number	Benævnelse	Description	Index Pos.	Index Side/ Page
18.339.000	1	Fjederklemme, ϕ3 mm	Spring clip ϕ3 mm	b-4	3A
28.342.000		3 m kantliste	3 m edging	d-1	10A
35.325.000	2	Splitbolt	Cotter bolt	c-5	19A
38.140.000	1	Vinkelbolt	Angle bolt	b-4	3A
38.704.000	1	Bøsning	Bushing	c-1	2A
38.710.000	1	Fjeder	Spring	b-5	20A
39.147.000	1	Skive	Washer	b-4	3A
39.730.000	1	Skive	Washer	a-5	9A
39.874.000	1	Bøjle	Clamp	b-4	8A
42.176.000		Fergusonsplit	Linch pin	xa-4	17A
43.529.000	2	Splitbolt	Cotter bolt	xa-4	2A
45.403.000	4	Leje	Bearing	b-2	5A
45.428.000		M 10 - 25 Stålplovbolt, specielbolt	M 10 - 25 Steel plough bolt, special bolt	b-4	1A
45.432.000		M 10 - 19 Bræddebolt, specialbolt	M 10 - 19 Carriage bolt, special bolt	xc-2	11A
46.227.000		Skive	Washer	b-4	1A
47.266.000	2	Mellemplade	Intermediate plate	a-2	31A
47.267.000	1	Endeplade	End plate	b-3	31A
48.651.000	16	Afstandsskive	Spacing washer	d-4	17A
49.553.000	2	Dyse	Nozzle	b-4	2A
58.384.000	1	Nylonsnor, ϕ6 mm, l = 8000 mm	Nylon string, ϕ6 mm, l = 8000 mm	a-1	6A
58.433.000	2	Forbindelsesstang	Connection rod	c-5	7A
58.454.100		Kabelholder	Cable holder	xd-4	6A
58.454.200	3	Kabelholder	Cable holder	b-4	30A
58.498.000	2	Afstandsbøsning	Distance bushing	b-3	8A
58.772.000	1	Fjederstrammer	Spring tensioner	b-4	9A
59.365.000	1	Splitbolt	Cotter bolt	b-4	3A
59.447.000	4	Skive	Washer	c-1	16A
59.880.000	1	Beslag	Bracket	b-1	31A
59.888.000	1	Beslag	Bracket	b-1	31A
59.976.000	1	3/4 - 7/16 Kæde, l = 58 mm	3/4 - 7/16 Chain, l = 58 mm	c-5	21A
60.149.000	2	1/2" lynkobling med nippel	1/2" quick coupling with nipple	b-1	28A
63.101.040		Medbringerring	Carrier ring	a-3	16A
63.102.200	1	Afstrygerbom	Deflector bar	c-4	18A
63.103.400	4	Knivbro, midterste komplet	Knife section middle, complete	a-3	17A
63.108.100	2	Skive	Washer	d-4	16A
63.110.000	1	Drivkædehjul, 40 tdr.	Drive chain wheel, 40 teeth	d-2	21A
63.111.000	1	Bolt	Bolt	d-4	16A

Del nr. Part No.	Antal Number	Benævnelse	Description	Index Pos.	Index Side/Page
63.112.000	1	Rør	Tube	c-4	16A
63.113.100	1	Sideplade, højre	Side plate, right	a-4	16A
63.116.200	8	Låsestykke	Locking piece	d-5	18A
63.118.100	1	Underste svøb	Sheel, lower	d-5	17A
63.119.000	1	Svøb	Shell	c-5	18A
63.120.100	1	Sideplade, venstre	Side plate, left	c-2	16A
63.121.100	1	Sidestykke	Side piece	d-2	16A
63.122.400	1	Knivbro, venstre, komplet	Knife section, left complete	b-2	17A
63.123.400	1	Knivbro, højre, komplet	Knife section, right complete	a-4	17A
63.125.000	1	Aksel	Shaft	d-4	17A
63.126.000	3	Justerplade	Adjusting plate	d-4	17A
63.127.100	2	Plade	Plate	d-1	16A
63.128.000	1	Ophængningsplade	Hanging plate	d-1	16A
63.133.000	6	Bolt	Bolt	c-1	17A
63.140.000	6	Aksel	Shaft	b-1	17A
63.144.200	1	Skærm	Guard	d-2	16A
63.150.200	1	Cylinder	Cylinder	c-2	30A
63.151.100	1	Pick-up ramme	Pick-up frame	d-3	19A
63.152.100	1	Konsol	Bracket	d-3	19A
63.154.000	5	Konsol	Bracket	a-2	20A
63.155.100	1	Rotor	Rotor	c-2	20A
63.156.200	1	Kædehjul, 30 tdr.	Chain wheel, 30 teeth	d-4	21A
63.156.300	1	Kædehjul, 40 tdr.	Chain wheel, 40 teeth	b-4	21A
63.158.000	23	Pick-up bånd	Pick-up band	a-1	20A
63.160.000	1	Holder	Holder	c-3	30A
63.162.200	2	Arm	Arm	d-5	19A
63.163.200	1	Bjælke	Bar	a-2	6A
63.164.000	1	Hængsel, højre	Hinge, right	a-5	19A
63.165.000	1	Hængsel, venstre	Hinge, left	c-1	19A
63.166.000	1	Bolt	Bolt	c-3	30A
63.167.000	1	Bolt	Bolt	d-2	30A
63.168.100	5	Rulle	Roller	b-1	20A
63.169.100	5	Tap	Pin	c-1	20A
63.170.200	1	Skærm	Guard	d-2	19A
63.171.200	1	Løftearm, højre	Lifting arm, right	b-5	19A
63.172.200	1	Løftearm, venstre	Lifting arm, left	d-2	19A
63.173.000	1	Muffe	Socket	c-3	30A

Del nr. Part No.	Antal Number	Benævnelse	Description	Index Pos.	Index Side/ Page
63.174.200	1	Kædestrammer	Chain tightener	c-4	21A
63.175.000	2	Rulle	Roller	xc-2	30A
63.180.000	10	Bøsning	Bushing	b-3	20A
63.181.100	1	Nav	Hub	a-5	16A
63.183.000	6	Møtrik	Nut	b-1	18A
63.184.100	1	Rulle	Roller	c-3	21A
63.185.000	2	Afstandsring, 0,5 mm	Distance ring, 0.5 mm	xb-4	16A
63.186.000	2	Afstandsring, 1,0 mm	Distance ring, 1.0 mm	xb-4	16A
63.187.100	2	Holder	Holder	xd-5	20A
63.189.000	6	Justerskive	Adjusting piece	c-1	17A
63.190.000	1	Ledekurve	Guiding barskets	c-1	20A
63.193.000	1	Flange	Flange	d-4	21A
63.195.000	6	Møtrik	Nut	b-1	18A
63.197.100	2	Stang	Bar	a-3	5A
63.198.000	2	Justerkonsol	Adjusting bracket	xc-2	6A
63.200.000	1	Låg	Gearbox lid	a-4	15A
63.201.000	1	Aksel	Shaft	d-4	14A
63.202.000	1	Kædehjul, 14 tdr.	Chain wheel, 14 teeth	a-2	15A
63.203.000	1	Mellemhjul, 15/30 tdr.	Intermediate wheel, 15/30 teeth	b-3	15A
63.204.000	1	Mellemaksel	Intermediate shaft	c-3	15A
63.205.200	1	Kædehjul, 21 tdr.	Chain wheel, 21 teeth	a-2	21A
63.206.000	1	Kædehjul, 38 tdr.	Chain wheel, 38 teeth	d-4	15A
63.207.000	1	Gearkassebund	Gearbox bottom	a-4	15A
63.208.000	4	Kædenød, 6 tdr.	Sprocket, 6 teeth	d-3	14A
63.210.000	1	Hulaksel	Hollow shaft	b-2	15A
63.211.000	1	Flange	Flange	b-5	14A
63.212.000	1	Aksel	Shaft	d-4	15A
63.213.100	1	Akseltap	Shaft pin	b-3	21A
63.214.000	4	Lejekonsol	Bearing bracket	d-3	14A
63.215.000	1	Støtterulle	Supporting roller	d-3	14A
63.216.000	1	Støtterulle	Supporting roller	c-4	14A
63.217.000	1	Skærm	Guard	c-2	3A
63.223.000	1	Holder	Holder	b-2	28A
63.224.000	3	Lap	Lug	xd-4	6A
63.227.000	1	Kædehjul, 13 tdr.	Chain wheel, 13 teeth	b-2	21A
63.230.000	1	Glideleje	Side-shoe bearing	b-4	15A
63.231.000	1	Glideleje	Side-shoe bearing	a-4	15A

Del nr. Part No.	Antal Number	Benævnelse	Description	Index Pos.	Index Side/ Page
63.232.000	1	Glideleje	Side-shoe bearing	b-5	15A
63.233.000	1	Glideleje	Side-shoe bearing	b-4	15A
63.234.000	2	Lap	Lug	d-1	29A
63.235.000	2	Lap	Lug	c-1	29A
63.236.000	2	Holder	Holder	d-1	29A
63.237.000	2	Holder	Holder	d-1	29A
63.238.000	2	Holder	Holder	d-1	29A
63.239.100	1	Værktøj	Tools	d-1	3A
63.240.000	1	Nav	Hub	a-1	21A
63.241.000	1	Bolt	Bolt	b-3	21A
63.243.100	1	Beslag	Bracket	d-3	31A
63.244.000	1	Stålwire, ϕ5 mm, l = 2400 mm	Steel wire, ϕ5 mm, l = 2400 mm	d-2	6A
63.246.000	2	Holder	Holder	xa-2	1A
63.247.000	4	Holder	Holder	xd-3	28A
63.248.000	2	Plade	Plate	b-4	29A
63.250.100	1	Bogie-konsol	Bogie-bracket	c-4	1A
63.251.000	4	Skive	Washer	b-3	1A
63.253.000	2	Aksel	Shaft	d-2	1A
63.254.000	1	Bøsning	Bushing	b-3	21A
63.255.100	2	Stang	Bar	b-2	1A
63.259.000	4	Fjeder	Spring	b-2	5A
63.268.000	4	Akseltap	Axle journal	c-1	5A
63.269.100	2	Arm	Arm	b-3	5A
63.271.000	1	Støttelap	Support	c-4	21A
63.272.000	4	Splitbolt	Cotter bolt	c-1	5A
63.273.000	1	Indføringsrulle	Feed roller complete	b-2	19A
63.274.000	2	Lejeskål	Bearing cup	b-2	19A
63.275.000	2	Spændeplade	Clamp plate	b-2	19A
63.277.100	1	Skærm, venstre	Guard, left	c-1	19A
63.278.100	1	Skærm, højre	Guard, right	a-4	19A
63.279.000	1	Afstandsrør	Distance tube	b-2	19A
63.280.000	1	Afstandsstykke	Distance piece	d-4	17A
63.282.000	2	Støttekile	Supporting clamp	c-1	1A
63.284.000	2	Skrue	Screw	a-1	16A
63.285.000	2	Konsol	Bracket	a-1	16A
63.286.000	1	Holdeværktøj komplet	Tool complete	a-1	16A
63.297.000	1	Stålwire, ϕ8 mm, l = 1950 mm	Steel wire, ϕ8 mm, l = 1950 mm	b-3	30A

Del nr. Part No.	Antal Number	Benævnelse	Description	Index Pos.	Index Side/ Page
63.298.100	2	Skærm	Guard	c-2	10A
63.299.000	1	Tværbjælke	Cross beam	c-4	1A
63.300.000	6	Tværbjælke	Cross beam	c-4	1A
63.301.100	1	Tværbjælke	Cross beam	d-5	1A
63.302.000	1	Vange, højre	Side member, right	c-5	1A
63.303.000	2	Ledeskinne	Guide rail	a-4	14A
63.304.000	1	Vange, venstre	Side member, left	c-2	1A
63.306.000	2	Splitbolt	Cotter bolt	c-3	2A
63.307.000	4	Plade	Plate	d-3	2A
63.308.000	1	Kontramøtrik	Counter nut	a-3	2A
63.310.100	1	Cylinder	Cylinder	a-4	2A
63.311.000	1	Tværbjælke	Cross beam	c-4	1A
63.312.100	1	Inderste rør	Inner tube	b-5	3A
63.313.100	1	Yderste rør	Outer tube	b-5	3A
63.314.000	1	Fod	Foot	c-5	3A
63.317.000	4	Kædestrammer	Chain tightener	b-1	14A
63.318.000	1	Tværbjælke, forreste	Cross beam, front	a-2	1A
63.319.000	4	Aksel	Shaft	a-1	14A
63.320.000	4	Justerskrue	Adjusting screw	b-1	14A
63.321.100	1	Stang	Rod	a-4	3A
63.322.000	1	Skive	Washer	a-3	21A
63.323.100	1	Trækstang	Drawbar	d-2	2A
63.331.000	2	Fladstål	Flat iron	d-5	9A
63.332.000	1	Plade, højre	Plate, right	c-5	9A
63.332.900	1	Plade, venstre	Plate, left	c-5	9A
63.333.000	1	Bolt	Bolt	b-4	9A
63.334.000	1	Rør	Pipe	a-5	9A
63.335.000	1	Håndsving	Handle	a-5	9A
63.336.000	1	Holder	Holder	a-5	9A
63.337.200	1	Bjælke	Bar	b-2	9A
63.338.000	1	Stålwire, ϕ6,5 mm, 1 = 1550 mm	Steel wire, ϕ6.5 mm, 1 = 1550 mm	b-4	9A
63.339.000	2	Splitbolt	Cotter bolt	d-5	9A
63.340.000	1	Stålwire, ϕ5 mm, 1 = 4100 mm	Steel wire, ϕ5 mm, 1 = 4100 mm	c-4	9A
63.344.000	1	Holder	Holder	c-5	8A
63.345.000	1	Holder	Holder	c-5	8A
63.350.100	2	Profil	Profile	b-2	10A
63.351.200	1	Skærm, højre	Guard, right	c-5	2A

Del nr. Part No.	Antal Number	Benævnelse	Description	Index Pos.	Index Side/Page
63.352.200	1	Skærm, venstre	Guard, left	d-4	2A
63.353.000	9	Profil	Channel	b-2	10A
63.354.100	4	Ledeskinne	Guide rail	d-5	11A
63.355.000	4	Kædehjul	Chain wheel	a-1	14A
63.356.000	1	Forstærkning, højre	Reinforcement, right	b-5	10A
63.357.000	1	Forstærkning, venstre	Reinforcement, left	c-4	10A
63.359.101		Medbringer	Slot	b-1	14A
63.360.100	1	Støtteprofil, højre	Supporting channel, right	b-5	11A
63.368.000	1	Skærm, højre	Guard, right	c-5	2A
63.369.000	1	Skærm, venstre	Guard, left	d-4	2A
63.370.000	2	Stop	Stop	b-5	18A
63.373.200	2	Cylinder	Cylinder	c-2	12A
63.374.000	2	Muffe	Muff	c-1	12A
63.377.100	2	Splitbolt	Cotter bolt	c-1	12A
63.379.000	1	Bagklap	Tailgate	c-5	12A
63.380.000		Bøsning	Bushing	xb-3	5A
63.381.000	1	Bøjle	Hoop	c-5	12A
63.382.000	1	Skraber	Scraper	a-4	21A
63.383.000	1	Løftearm, højre	Lifting arm, right	a-5	12A
63.384.000	1	Skraber	Scraper	a-2	21A
63.386.000	2	Tap	Pin	d-2	12A
63.387.000	1	Skraber	Scraper	a-2	21A
63.388.000	1	Presenning	Tarpaulin	c-5	12A
63.391.000	1	Skærm	Guard	d-2	3A
63.394.100	1	Støtteprofil, venstre	Supporting channel, left	d-3	11A
63.396.000	3	Rulle	Roller	xc-4	9A
63.397.100	1	Plade	Plate	c-3	14A
63.398.100	2	Plade	Plate	c-3	14A
63.399.200	4	Bremsecylinder	Brake cylinder	c-1	5A
63.400.000	2	Pal	Pawl	d-2	12A
63.401.000	2	Mellemlæg	Shim	b-3	1A
63.402.000	1	Beslag	Bracket	c-3	32A
63.403.000	2	Stopklods	Stop block	d-1	9A
63.405.000	1	Løftearm, venstre	Lifting arm, left	c-2	12A
63.406.200	1	Plade, højre	Plate, right	b-4	14A
63.407.100	1	Plade, venstre	Plate, left	c-2	14A
63.408.000	2	Bundkæde komplet	Conveyor chain, complete	b-3	14A

Del nr. Part No.	Antal Number	Benævnelse	Description	Index Pos.	Index Side/ Page
63.409.000	1	Skive	Washer	b-1	10A
63.410.000	1	Nylonsncr, ϕ4 mm, 1 = 13000 mm	Nylon string, ϕ4 mm, 1 = 13000 mm	c-5	12A
63.413.000	1	Konsol, venstre	Bracket, left	c-2	12A
63.414.000	1	Konsol, højre	Bracket, right	a-5	12A
63.416.000	1	Nylonsncr, ϕ6 mm, 1 = 15000 mm	Nylon string, ϕ6 mm, 1 = 15000 mm	b-2	33A
63.420.100	2	Bundbræt	Bottom board	a-2	11A
63.421.100	2	Bundbræt	Bottom board	d-5	11A
63.422.100	1	Bundbræt	Bottom board	a-1	11A
63.423.100	1	Bundbræt	Bottom board	d-5	11A
63.424.100	2	Bundbræt	Bottom board	a-2	11A
63.425.100	2	Bundbræt	Bottom board	d-5	11A
63.433.100	2	Splitbolt	Cotter bolt	a-5	12A
63.439.000	1	Rør	Tube	a-2	32A
63.442.100	1	Slibeapparat med vinkelsliber komplet	Grinding device with angle grinder complete	a-1	34A
63.449.100	1	Slibeværktøj komplet, stationær	Grinding tools complete, stationary	a-3	34A
63.450.100	1	Slibeapparat mobilt komplet	Grinding device, mobile complete	a-1	34A
63.451.100	1	Konsol	Bracket	b-4	34A
63.452.000	1	Vinkelsliber komplet	Angle grinder complete	c-2	34A
63.453.000	1	Bøsning	Bushing	a-3	34A
63.454.000	1	Fjeder	Spring	a-4	34A
63.455.000	1	Holder	Holder	a-3	34A
63.456.000	1	Rør	Tube	a-4	34A
63.457.000	1	Arm	Arm	a-5	34A
63.458.100	1	Holder	Holder	b-5	34A
63.459.000	1	Holder	Holder	a-5	34A
63.460.100	1	Skærm	Guard	d-1	34A
63.461.000	1	Skærm	Guard	d-2	34A
63.468.100	1	Slibeapparat uden vinkelsliber komplet	Grinding device without angle grinder complete	a-1	34A
63.470.000	1	Vridbart øje	Torsion eye	a-1	2A
63.474.300	2	Bogiearm, 1 = 1100 mm	Bogie arm, 1 = 1110 mm	b-5	5A
63.475.000		Sæt à 17 blændknive	Set of 17 blunt knives	d-1	17A
63.476.000	2	Bremseslange, 1 = 2800 mm	Brake tube, 1 = 2800 mm	a-1	8A
63.478.000	1	Bremserør, reg. til cylinder	Brake pipe, reg. for cylinder	c-4	8A
63.479.000	1	Bremserør, ventil til tank	Brake pipe, valve for tank	c-4	8A
63.480.000	1	Bremserør, vange til tank	Brake pipe, side member for tank	d-4	8A
63.481.000	1	Bremserør, vange til kryds	Brake pipe, side member for cross	d-4	8A
63.482.000	1	Bremserør, kryds til T	Brake pipe, cross for T	b-4	7A

Del nr. Part No.	Antal Number	Benævnelse	Description	Index Pos.	Index Side/ Page
63.493.000	1	Håndbremse	Brake handle	c-1	6A
63.495.000	76	Afstryger komplet	Deflector complete	b-4	18A
63.496.100	2	Støttehjulssæt komplet	Supporting wheel set complete	d-5	19A
63.498.000	4	Bremseslange, 1 = 510 mm	Brake tube, 1 = 510 mm	b-2	7A
63.501.200	1	Knivbro, højre	Knife bridge, right	a-4	17A
63.502.200	1	Knivbro, venstre	Knife bridge, left	b-2	17A
63.503.200	4	Knivbro, midterste	Knife bridge, middle	b-3	17A
63.506.100	1	Tromle komplet	Drum complete	b-3	16A
63.507.100	4	Vinkelskinne	Angle rail	b-4	17A
63.509.100	2	Vinkelskinne	Angle rail	xc-3	17A
63.511.000	1	Kædehjul komplet	Chain wheel complete	d-4	21A
63.513.100	4	Låsestykke	Locking piece	b-3	17A
63.514.100	2	Låsestykke	Locking piece	xa-4	17A
63.515.000	1	Gearkasse komplet	Gearbox complete	a-1	15A
63.520.100	1	1" x 17 mm kæde komplet, 1 = 2946 mm	1" x 17 mm chain complete, 1 = 2946 mm	c-1	21A
63.525.000	1	3/4 x 7/16 kæde komplet, 1 = 1829 mm	3/4 x 7/16 chain complete, 1 = 1829 mm	d-2	21A
63.529.000	4	Samleled komplet	Joint link complete	b-3	14A
63.530.000	1	3/4 - 7/16 kæde komplet, 1 = 914 mm	3/4 - 7/16 chain complete, 1 = 914 mm	c-4	15A
63.532.000	1	Bogiearm, venstre, 1 = 1110 mm	Bogie arm, left, 1 = 1110 mm	b-4	4A
63.533.000	1	Bogiearm, højre, 1 = 1110 mm	Bogie arm, right, 1 = 1110 mm	b-4	4A
63.535.000	1	3/4 - 7/16 kæde komplet, 1 = 800 mm	3/4 - 7/16 chain complete, 1 = 800 mm	a-3	15A
63.537.000	4	Vinkelstykke	Angle piece	b-3	17A
63.538.000	2	Vinkelstykke	Angle piece	xc-3	17A
63.544.100	1	Bogiearm - trykluftbremse komplet	Bogie arm - air pressure brake complete	a-4	4A
63.546.000	4	5.00/55 - 15,5 hjul komplet	5.00/55 - 15.5 wheel complete	b-2	4A
63.549.100		Sæt à 10 knive	Set of 10 knives	d-1	17A
63.550.000	4	5.00/55 - 15,5 hjul komplet	5.00/55 - 15.5 wheel complete	d-2	4A
63.569.000	1	Kabel	Cable	b-5	31A
63.573.000	1	Kabel	Cable	a-4	31A
63.574.000	1	Kabel	Cable	b-1	32A
63.578.100	1	Frontlys komplet	Front light complete	c-2	31A
63.586.000		Sæt à 22 kædehjulssegmenter incl. bolte	Set of 22 chain wheels segment inclusive bolts	a-2	21A
63.587.000		Sæt à 10 pick-up-fjedre og fjederbeslag incl. bolte	Set of 10 pick-up springs and spring brackets inclusive bolts	d-2	20A
63.591.000	1	Kabel	Cable	c-2	31A
63.592.000	1	Kabel	Cable	c-2	31A
63.596.000	1	Kabel	Cable	b-5	31A

Del nr. Part No.	Antal Number	Benævnelse	Description	Index Pos.	Index Side/ Page
63.597.000	1	Skærm	Guard	a-1	10A
63.598.000	7	Hængsel	Hinge	xd-3	10A
63.612.100	1	Kabel	Cable	c-4	32A
63.613.100	1	Kabel	Cable	d-3	32A
63.614.000	1	Kabel	Cable	c-3	32A
63.650.000	3	1/4" hydraulikslange, l = 350 mm	1/4" hydraulic hose, l = 350 mm	xc-1	28A
63.651.000	4	1/4" hydraulikslange, l = 530 mm	1/4" hydraulic hose, l = 530 mm	xc-4	29A
63.652.000	3	1/4" hydraulikslange, l = 650 mm	1/4" hydraulic hose, l = 650 mm	xb-1	27A
63.654.000	2	5/8" hydraulikslange, l = 2550 mm	5/8" hydraulic hose, l = 2550 mm	b-1	28A
63.655.000	2	5/8" hydraulikslange, l = 1060 mm	5/8" hydraulic hose, l = 1060 mm	d-2	29A
63.656.000	1	3/8" hydraulikslange, l = 2550 mm	3/8" hydraulic hose, l = 2550 mm	a-3	6A
63.657.000	4	3/8" hydraulikslange, l = 725 mm	3/8" hydraulic hose, l = 725 mm	c-5	6A
63.660.100	1	Rør, ϕ20/ϕ16, l = 1510 mm	Tube, ϕ20/ϕ16, l = 1510 mm	b-4	28A
63.661.100	1	Rør, ϕ20/ϕ16, l = 1230 mm	Tube, ϕ20/ϕ16, l = 1230 mm	b-4	28A
63.662.100	1	Rør, ϕ 8/ϕ 6, l = 2005 mm	Tube, ϕ 8/ϕ 6, l = 2005 mm	c-3	28A
63.663.100	1	Rør, ϕ 8/ϕ 6, l = 2045 mm	Tube, ϕ 8/ϕ 6, l = 2045 mm	d-3	28A
63.664.100	2	Rør, ϕ 8/ϕ 6, l = 5890 mm	Tube, ϕ 8/ϕ 6, l = 5890 mm	a-2	29A
63.665.100	1	Rør, ϕ20/ϕ16, l = 5845 mm	Tube, ϕ20/ϕ16, l = 5845 mm	b-1	29A
63.666.100	1	Rør, ϕ20/ϕ16, l = 5865 mm	Tube, ϕ20/ϕ16, l = 5865 mm	b-1	29A
63.667.100	1	Rør, ϕ 8/ϕ 6, l = 3525 mm	Tube, ϕ 8/ϕ 6, l = 3525 mm	a-4	30A
63.669.000	1	Rør, ϕ12/ϕ 9, l = 4075 mm	Tube, ϕ12/ϕ 9, l = 4075 mm	a-5	6A
63.670.000	1	Rør, ϕ12/ϕ 6, l = 1380 mm	Tube, ϕ12/ϕ 6, l = 1380 mm	c-4	6A
63.671.000	4	Rør, ϕ 8/ϕ 6, l = 680 mm	Tube, ϕ 8/ϕ 6, l = 680 mm	b-5	29A
63.672.000	2	Rør, ϕ 8/ϕ 6, l = 2138 mm	Tube, ϕ 8/ϕ 6, l = 2138 mm	d-4	29A
63.676.000	1	Bogiearm - hydraulisk bremse komplet	Bogie arm - hydraulic brake complete	a-4	4A
63.677.100	1	Topræk komplet	Top extension complete	a-1	33A
63.708.100	1	U-profil	U-profile	b-3	1A
63.709.000	1	Rør, ϕ12/ϕ 9, l = 380 mm	Tube, ϕ12/ϕ 9, l = 380 mm	b-5	6A
63.712.000	1	Bøjle	Clamp	d-3	3A
63.729.000	1	Kædehjul med kæde	Chain wheel with chain	b-4	21A
63.740.000	1	Olierør	Oil tube	d-3	34A
63.741.000	1	Olieslange	Oil tube	d-3	34A
63.742.000	1	Konsol	Bracket	d-4	34A
63.743.000	1	Drypsmøring komplet	Drip-oiling unit complete	c-2	34A
63.776.000	1	Spindel	Spindle	c-5	20A
63.777.000	1	Bøjle	Clamp	b-5	20A
63.778.000	2	Fjederskål	Spring bowl	b-5	20A

Del nr. Part No.	Antal Number	Benævnelse	Description	Index Pos.	Index Side/Page
63.779.000	1	Splitbolt	Cotter bolt	b-5	20A
63.780.000	1	Fjeder komplet	Spring complete	c-5	20A
63.782.000	1	Stålwire, ϕ8 mm, 1 = 650 mm	Steel wire, ϕ8 mm, 1 = 650 mm	c-5	20A
63.783.000	1	Aksel	Shaft	b-3	34A
63.784.000	3	Mellemlægsstykke	Filling piece	a-3	3A
63.785.000	1	Skive	Disc	a-1	21A
63.797.000	4	Spændestykke	Clamp	b-3	17A
63.798.000	4	Spændestykke	Clamp	xc-2	17A
63.803.000	1	Skærm	Guard	d-2	2A
63.807.000	1	Nederste sideplade, højre	Lowest side plate, right	a-4	11A
63.808.000	1	Nederste sideplade, venstre	Lowest side plate, left	d-2	11A
63.809.000	1	Øverste sideplade, højre	Upper side plate, right	b-4	11A
63.810.000	1	Øverste sideplade, venstre	Upper side plate, left	c-1	11A
63.811.100	1	Top sideplade, højre	Top side plate, right	c-4	13A
63.812.100	1	Top sideplade, venstre	Top side plate, left	b-3	13A
63.815.000	1	Kabler komplet	Cables complete	b-5	31A
63.816.000	1	Holder	Holder	b-2	28A
63.817.000	2	Rør, ϕ12/ϕ 9, 1 = 138 mm	Tube, ϕ12/ϕ 9, 1 = 138 mm	xb-2	27A
63.826.000	1	Tandhjulssæt (Z = 12/29)	Tooth wheel set (Z = 12/29)	d-5	22A
63.827.000	1	Tandhjulssæt (Z = 16/29)	Tooth wheel set (Z = 16/29)	d-5	23A
63.828.000	1	Tandhjulssæt (Z = 12/29)	Tooth wheel set (Z = 12/29)	d-5	23A
63.905.000	1	Endeplade	End plate	a-1	31A
63.909.000	1	Relæboks komplet	Relay box complete	c-3	31A
63.957.000	1	Hjørneskærm, højre	Corner plate, right	a-4	10A
63.958.000	1	Hjørneskærm, venstre	Corner plate, left	c-2	10A
63.959.000	4	Sideplade	Side plate	d-2	13A
63.960.000	1	Sideplade, venstre	Side plate, left	c-1	13A
63.961.000	1	Sideplade, højre	Side plate, right	a-5	13A
63.962.100	1	Profil, højre	Profile, right	a-3	13A
63.963.100	1	Profil, venstre	Profile, left	b-2	13A
63.964.000	1	Profil	Profile	a-3	10A
63.966.000	1	U-profil	U-profile	a-1	13A
63.967.000	2	Vinkelstykke	Angle piece	a-1	13A
63.968.100	1	Bøjle	Hoop	b-4	13A
63.969.100	1	Forplade	Front plate	b-2	13A
63.970.000	1	Slangeholder	Tube holder	b-2	2A
63.971.000	1	Trækstang	Drawbar	b-2	2A

Del nr. Part No.	Antal Number	Benævnelse	Description	Index Pos.	Index Side/ Page
63.972.000	1	Forplade	Front plate	a-2	18A
63.973.000	1	Holder	Holder	a-1	27A
63.975.100	1	Topræk	Top extension	c-2	33A
63.976.100	1	Presenning	Tarpaulin	a-5	33A
63.977.000	2	Holder	Holder	a-4	10A
63.978.100	4	Rør, ϕ12/ϕ 9, 1 = 200 mm	Tube, ϕ12/ϕ 9, 1 = 200 mm	d-5	27A
63.979.100	2	Rør, ϕ12/ϕ 9, 1 = 157 mm	Tube, ϕ12/ϕ 9, 1 = 157 mm	xa-3	27A
63.980.000	1	Rør, ϕ 8/ϕ 6, 1 = 1090 mm	Tube, ϕ 8/ϕ 6, 1 = 1090 mm	c-5	27A
63.982.000	1	Skærm	Guard	c-3	3A
63.984.000	1	Skærm, højre	Guard, right	c-4	10A
63.984.900	1	Skærm, venstre	Guard, left	c-3	10A
63.985.000	1	Forreste ramme	Front frame	c-4	2A
63.987.000	1	Ophængsplade	Suspension plate	c-2	2A
63.994.000	1	Styreboks komplet	Control box complete	a-2	31A
63.997.000	1	Rør, ϕ 8/ϕ 6, 1 = 33 mm	Tube, ϕ 8/ϕ 6, 1 = 33 mm	a-2	27A
64.164.200	11	Støtteprofil	Supporting profile	xb-5	13A
64.165.000	2	Spændestykke	Tightening piece	c-4	13A
64.166.200	1	Profil, venstre	Profile, left	c-4	13A
64.167.200	1	Profil, højre	Profile, right	b-5	13A
64.168.000	1	U-profil, venstre	U-profile, left	b-3	13A
64.169.000	1	U-profil, højre	U-profile, right	a-4	13A
64.170.000	1	U-profil, venstre	U-profile, left	a-1	11A
64.171.000	1	U-profil, højre	U-profile, right	a-2	11A
64.187.100	1	Støttestang	Hoop	b-3	13A
64.198.000	1	Gevindstykke	Threaded eye	a-3	2A
64.203.000	1	Holder, højre	Holder, right	a-4	12A
64.204.000	1	Holder, venstre	Holder, left	b-3	12A
64.261.000	6	Støtteprofil	Supporting profile	xb-4	11A
64.262.000	2	Støtteprofil	Supporting profile	b-5	11A
65.149.000	1	Bolt	Bolt	b-2	19A
65.463.000	1	Bøjle	Clamp	c-1	2A
65.553.000		Sæt af 10 afstrygerspidser	Set of 10 deflector points	d-1	18A
68.373.100	6	Hydraulikslange, 1 = 280 mm	Hydraulic hose, 1 = 280 mm	c-1	27A
99.100.215	4	6005 Leje	6005 Bearing	d-5	19A
99.100.310	4	6204 Leje	6204 Bearing	d-4	19A
99.100.319	2	6205 - 2 RS Leje	6205 - 2 RS Bearing	b-2	21A
99.100.334	2	6208 - 2 RS C3 Leje	6208 - 2 RS C3 Bearing	b-2	19A

Del nr. Part No.	Antal Number	Benævnelse		Description		Index Pos.	Index Side/Page
99.100.369	2	6215 - 2 RS	Leje	6215 - 2 RS	Bearing	xc-3	16A
99.106.025	1	30.208	Konisk rulleleje	30.208	Conical roller bearing	b-5	23A
99.106.035	1	30.210	Konisk rulleleje	30.210	Conical roller bearing	b-2	23A
99.106.040	2	30.211	Konisk rulleleje	30.211	Conical roller bearing	xc-5	4A
99.106.045	1	30.212	Konisk rulleleje	30.212	Conical roller bearing	d-2	23A
99.106.055	1	30.214	Konisk rulleleje	30.214	Conical roller bearing	c-3	22A
99.106.125	2	32.211	Konisk rulleleje	32.211	Conical roller bearing	xd-3	5A
99.106.145	1	32.215	Konisk rulleleje	32.215	Conical roller bearing	d-3	5A
99.106.225	1	30.307	Konisk rulleleje	30.307	Conical roller bearing	a-3	23A
99.106.235	1	30.309	Konisk rulleleje	30.309	Conical roller bearing	b-5	22A
99.106.540	1	LM 102.949	Timken rulleleje	LM 102.949	Timken roller bearing	c-5	4A
99.127.025	2	ϕ35	Pladeflangeleje	ϕ 35	Plate flange bearing	b-4	20A
99.158.010	6	16 DX 12	Glacier lejebøsning	16 DX 12	Glacier bearing bushing	c-1	17A
99.158.062	14	PM 3020 DX	Glacier glideleje	PM 3020 DX	Glacier slide bearing	b-3	15A
99.158.064	2	PM 3030 DX	Glacier lejebøsning	PM 3030 DX	Glacier bearing bushing	xa-4	2A
99.158.087	4	PM 4530 DX	Glacier lejebøsning	PM 4530 DX	Glacier bearing bushing	d-3	14A
99.158.095	4	PM 7040	Glacier lejebøsning	PM 7040	Glacier bearing bushing	d-1	1A
99.210.141		3/4 - 7/16	Samleled, Duplex	3/4 - 7/16	Joint link, Duplex	c-4	15A
99.210.836		3/4 - 7/16	Dobbelt forkrøbbet led	3/4 - 7/16	Double cranked link	d-2	21A
99.210.838		3/4 - 7/16	Lige svært samleled	3/4 - 7/16	Straight link	xc-4	21A
99.210.841		3/4 - 7/16	Lige samleled	3/4 - 7/16	Straight link	b-3	15A
99.210.861		1" - 17 mm	Samleled, Duplex	1" - 17 mm	Joint link Duplex	c-2	21A
99.240.282	1	656	Kraftoverføringsaksel komplet, l = (x - (x) - x) = 1118 mm	656	P.T.O. shaft complete, l = (x - (x) - x) = 1118 mm	d-1	24A
99.240.283	1	656	Kraftoverføringsaksel komplet, l = (x - (x) - x) = 1118 mm	656	P.T.O. shaft complete, l = (x - (x) - X) = 1118 mm	b-1	24A
99.240.940	1	SC 6	Friktionskobling komplet	SC 6	Friction coupling complete	c-4	25A
99.240.941	1	SC 6	Friktionskobling komplet	SC 6	Friction coupling complete	c-5	25A
99.241.293	4		Kæde komplet		Chain complete	xa-5	24A
99.241.325	1		Koblingshus		Coupling housing	c-4	25A
99.241.326	1		Tætningsring		Oil seal ring	c-4	25A
99.241.327	1		Låseskive		Lock washer	c-4	25A
99.241.328	1		Låsering komplet		Locking ring complete	c-1	24A
99.241.889	1		Snaplås komplet		Catch complete	c-2	24A
99.242.093	1		Indvendigt profilrør, l = 836 mm		Inner profile tube, l = 836 mm	b-2	25A

Del nr. Part No.	Antal Number	Benævnelse		Description		Index Pos.	Side/ Page
99.242.212	1		Udvendig lejering		Outer bearing ring	a-3	24A
99.242.213	1		Indvendig lejering		Inner bearing ring	b-5	24A
99.242.224	1		Gaffel		Yoke	a-2	24A
99.242.225	1		Gaffel		Yoke	a-2	25A
99.242.226	1		Beskyttelsesskærm		Protection guard	c-3	24A
99.242.228	1		Gaffel		Yoke	b-3	25A
99.242.230	2		Kryds komplet		Cross complete	xc-3	24A
99.242.231	1		Gaffel		Yoke	c-2	24A
99.242.232	1		Kryds komplet		Cross complete	b-3	25A
99.242.254	1		Udvendigt profilrør,l=836 mm		Outer profile tube,l=836 mm	b-2	25A
99.242.689	1		Centerstykke		Center piece	d-4	24A
99.242.691	1		Styreringe (1 sæt)		Set of guide rings	c-4	24A
99.242.707	1		Udvendigt beskyttelsesrør, 1 = 776 mm		Outer protection tube, 1 = 776 mm	a-4	24A
99.242.708	1		Indvendigt beskyttelsesrør, 1 = 776 mm		Inner protection tube, 1 = 776 mm	b-5	24A
99.250.505	1		Dæksel		Cover	c-5	22A
99.250.525	1		Gearkassehus		Gearbox housing	b-5	22A
99.250.528	1		Dæksel		Cover	a-3	22A
99.250.529	1		Dæksel		Cover	a-5	22A
99.250.530	1		Lejehals		Bearing collar	d-2	22A
99.250.531	1		Aksel		Shaft	b-3	22A
99.250.532	1		Aksel		Shaft	c-3	22A
99.250.540	2		Pakning		Gasket	xa-5	22A
99.250.560	1		Skive		Washer	d-2	23A
99.250.571	1		Lejehus		Bearing housing	c-2	23A
99.250.572	1		Lejehus		Bearing housing	c-1	23A
99.250.573	1		Aksel		Shaft	b-2	23A
99.250.575	1		Afstandsring		Distance ring	d-1	22A
99.250.577	1		Skive		Washer	c-3	23A
99.250.580	1	M 20 - 45	Undersænket skrue	M 20 - 45	Countersunk screw	c-3	23A
99.250.584	1	1/2" RG	Udluftningsprop	1/2" RG	Airing plug	b-4	23A
99.250.585	1	M 45 - 1,5	Låsemøtrik	M 45 - 1.5	Lock nut	b-4	22A
99.250.587	1	55/85 - 8	Olietætningsring	55/85 - 8	Oil seal ring	c-3	23A
99.250.588	1	35/60 - 10	Olietætningsring	35/60 - 10	Oil seal ring	a-3	22A
99.250.589	1	50/80 - 10	Olietætningsring	50/80 - 10	Oil seal ring	b-2	23A
99.250.590	1	70/100- 12	Olietætningsring	70/100- 12	Oil seal ring	d-2	22A

Del nr. Part No.	Antal Number	Benævnelse		Description		Index Pos.	Index Side/Page
99.250.591	1	70/110 - 12	Olietætningsring	70/110 - 12	Oil seal ring	d-1	23A
99.250.593	1		O-ring		O-ring	d-2	22A
99.250.870	1		Vinkelgear komplet, Z=12/29		Angle gear complete,Z=12/29	a-2	22A
99.250.871	1		Vinkelgear komplet, Z = 12/29 og 16/29		Angle gear complete, Z = 12/29 and 16/29	a-1	23A
99.250.906	1		Skive		Washer	b-5	23A
99.250.907	1		Skive		Washer	a-3	23A
99.250.926	2		Pakning		Gasket	xa-3	22A
99.250.932	1		Skive		Washer	b-5	22A
99.250.933	1		Skive		Washer	c-4	22A
99.250.945	1		Skive		Washer	b-3	22A
99.250.946	1		Skive		Washer	a-3	23A
99.250.949	1		Gearkassehus		Gearbox housing	b-4	23A
99.250.950	1		Dæksel		Cover	b-5	23A
99.250.956	1		Dæksel		Cover	a-3	23A
99.250.957	1		Aksel		Shaft	a-4	23A
99.250.963	1	M 55 - 2	Møtrik	M 55 - 2	Nut	d-1	22A
99.250.974	1		Afstandsskive		Spacing washer	b-2	23A
99.250.983	3		Olieudtømningsprop		Oil plug	xa-5	22A
99.250.984	1		Olieprop		Oil plug	b-4	23A
99.250.986	1		Oliestandsskrue		Oil level	a-4	23A
99.250.998	1	3/8"	Påfyldningsprop	3/8"	Filling plug	d-2	23A
99.302.102		M 6 - 16	Stålsætskrue	M 6 - 16	Steel set screw		
99.302.107		M 6 - 35	Stålbolt	M 6 - 35	Steel bolt		
99.302.201		M 8 - 16	Stålsætskrue	M 8 - 16	Steel set screw		
99.302.202		M 8 - 20	Stålsætskrue	M 8 - 20	Steel set screw		
99.302.204		M 8 - 25	Stålsætskrue	M 8 - 25	Steel set screw		
99.302.210		M 8 - 40	Stålbolt	M 8 - 40	Steel bolt		
99.302.220		M 8 - 65	Stålbolt	M 8 - 65	Steel bolt		
99.302.224		M 8 - 75	Stålbolt	M 8 - 75	Steel bolt		
99.302.250		M 10 - 15	Stålsætskrue	M 10 - 15	Steel set screw		
99.302.252		M 10 - 20	Stålsætskrue	M 10 - 20	Steel set screw		
99.302.254		M 10 - 25	Stålsætskrue	M 10 - 25	Steel set screw		
99.302.256		M 10 - 30	Stålsætskrue	M 10 - 30	Steel set screw		
99.302.258		M 10 - 35	Stålsætskrue	M 10 - 35	Steel set screw		
99.302.262		M 10 - 45	Stålbolt	M 10 - 45	Steel bolt		
99.302.264		M 10 - 50	Stålbolt	M 10 - 50	Steel bolt		

Del nr. Part No.	Antal Number	Benævnelse		Description		Index Pos.	Index Side/ Page
99.302.266		M 10 - 55	Stålbolt	M 10 - 55	Steel bolt		
99.302.268		M 10 - 60	Stålbolt	M 10 - 60	Steel bolt		
99.302.270		M 10 - 65	Stålbolt	M 10 - 65	Steel bolt		
99.302.272		M 10 - 70	Stålbolt	M 10 - 70	Steel bolt		
99.302.274		M 10 - 75	Stålbolt	M 10 - 75	Steel bolt		
99.302.298		M 10 - 180	Stålbolt	M 10 - 180	Steel bolt		
99.302.304		M 12 - 25	Stålsætskrue	M 12 - 25	Steel set screw		
99.302.306		M 12 - 30	Stålsætskrue	M 12 - 30	Steel set screw		
99.302.308		M 12 - 35	Stålsætskrue	M 12 - 35	Steel set screw		
99.302.310		M 12 - 40	Stålsætskrue	M 12 - 40	Steel set screw		
99.302.312		M 12 - 45	Stålbolt	M 12 - 45	Steel bolt		
99.302.320		M 12 - 65	Stålbolt	M 12 - 65	Steel bolt		
99.302.324		M 12 - 75	Stålbolt	M 12 - 75	Steel bolt		
99.302.406		M 16 - 30	Stålbolt	M 16 - 30	Steel bolt		
99.302.412		M 16 - 45	Stålbolt	M 16 - 45	Steel bolt		
99.302.416		M 16 - 55	Stålbolt	M 16 - 55	Steel bolt		
99.302.434		M 16 - 110	Stålbolt	M 16 - 110	Steel bolt		
99.307.130		3/4" UNF	Møtrik	3/4" UNF	Nut		
99.307.330		3/4"	Møtrik	3/4"	Nut		
99.307.766		M 20	Kontramøtrik	M 20	Counter nut		
99.307.775		M 33 - 15	Kontramøtrik	M 33 - 15	Counter nut		
99.307.800		M 5	Låsemøtrik	M 5	Lock nut		
99.307.802		M 6	Låsemøtrik	M 6	Lock nut		
99.307.806		M 8	Låsemøtrik	M 8	Lock nut		
99.307.810		M 10	Låsemøtrik	M 10	Lock nut		
99.307.812		M 10	Låsemøtrik, Bilock	M 10	Lock nut, Bilock		
99.307.814		M 12	Låsemøtrik	M 12	Lock nut		
99.307.818		M 14	Låsemøtrik	M 14	Lock nut		
99.307.822		M 16	Låsemøtrik	M 16	Lock nut		
99.307.830		M 20	Låsemøtrik	M 20	Lock nut		
99.307.832		M 20 - 1,5	Låsemøtrik	M 20 - 1.5	Lock nut		
99.307.844		M 4	Låsemøtrik	M 4	Lock nut		
99.307.850		M 5	Messingmøtrik	M 5	Brass nut		
99.307.852		M 6	Stålmøtrik	M 6	Steel nut		
99.307.860		M 10	Stålmøtrik	M 10	Steel nut		
99.307.864		M 12	Stålmøtrik	M 12	Steel nut		
99.307.872		M 16	Stålmøtrik	M 16	Steel nut		

Del nr. Part No.	Antal Number	Benævnelse		Description		Index Pos.	Index Side/Page
99.307.880		M 20	Stålmøtrik	M 20	Steel nut		
99.307.912		M 6	Topmøtrik	M 6	Top nut		
99.307.966		M 36 - 1,5	Kronemøtrik	M 36 - 1.5	Slotted nut		
99.309.202		M 10 - 20	Bræddebolt	M 10 - 20	Carriage bolt		
99.309.204		M 10 - 25	Bræddebolt	M 10 - 25	Carriage bolt		
99.309.206		M 10 - 30	Bræddebolt	M 10 - 30	Carriage bolt		
99.309.212		M 10 - 45	Bræddebolt	M 10 - 45	Carriage bolt		
99.309.216		M 10 - 55	Bræddebolt	M 10 - 55	Carriage bolt		
99.309.258		M 12 - 35	Bræddebolt	M 12 - 35	Carriage bolt		
99.313.410		AM 8 - 10	Pinolskrue	AM 8 - 10	Pointed screw		
99.313.516		AM 10 - 10	Pinolskrue	AM 10 - 10	Pointed screw		
99.315.011		M 6 - 35	Cylinderskrue	M 6 - 35	Slotted screw		
99.315.016		M 5 - 50	Cylinderskrue	M 5 - 50	Slotted screw		
99.315.025		M 6 - 225	Cylinderskrue	M 6 - 225	Slotted screw		
99.315.026		M 5 - 95	Cylinderskrue	M 5 - 95	Slotted screw		
99.315.053		M 8 - 20	Cylinderskrue	M 8 - 20	Slotted screw		
99.316.310		M 12 - 25	Rundhovedet skrue	M 12 - 25	Roundheaded screw		
99.322.382		M 10 - 22	Stålsætskrue	M 10 - 22	Steel set screw		
99.322.403		M 10 - 50	Stålsætskrue	M 10 - 50	Steel set screw		
99.322.462		M 12 - 100	Stålsætskrue	M 12 - 100	Steel set screw		
99.328.645		M 3 - 20	Cylinderskrue	M 3 - 20	Slotted screw		
99.328.648		M 4 - 16	Cylinderskrue	M 4 - 16	Slotted screw		
99.328.663		M 5 - 16	Cylinderskrue	M 5 - 16	Slotted screw		
99.328.665		M 5 - 25	Cylinderskrue	M 5 - 25	Slotted screw		
99.328.857		M 6 - 10	Selvskærende skrue	M 6 - 10	Self threading screw		
99.328.859		M 6 - 30	Krydskærvskrue	M 6 - 30	Cross slitted screw		
99.328.878		M 6 - 25	Fingerskrue	M 6 - 25	Screw		
99.328.888		M 10	Krydsgreb	M 10	Cross head	a-5	34A
99.330.312		5 - 30	Rørstift	5 - 30	Pipe pin	d-2	12A
99.330.318		5 - 40	Rørstift	5 - 40	Pipe pin	b-5	20A
99.330.362		6 - 30	Rørstift	6 - 30	pipe pin	xa-5	12A
99.330.365		6 - 36	Rørstift	6 - 36	Pipe pin	xd-3	30A
99.330.368		6 - 40	Rørstift	6 - 40	Pipe pin	c-3	30A
99.330.371		6 - 45	Rørstift	6 - 45	Pipe pin	xa-1	14A
99.330.375		6,5 - 45	Rørstift	6.5 - 45	Pipe pin	a-4	2A
99.330.377		6 - 55	Rørstift	6 - 55	Pipe pin	c-3	15A
99.330.421		7 - 45	Rørstift	7 - 45	Pipe pin	c-4	17A

Del nr. Part No.	Antal Number	Benævnelse		Description		Index Pos.	Index Side/Page
99.330.427		7 - 55	Rørstift	7 - 55	Pipe pin	c-3	2A
99.330.474		8 - 50	Rørstift	8 - 50	Pipe pin	a-3	20A
99.330.486		8 - 70	Rørstift	8 - 70	Pipe pin	a-1	2A
99.330.586		10 - 70	Rørstift	10 - 70	Pipe pin	xb-3	25A
99.330.589		10 - 75	Rørstift	10 - 75	Pipe pin	b-2	25A
99.330.698		12 - 100	Rørstift	12 - 100	Pipe pin	d-2	1A
99.330.730		13 - 70	Rørstift	13 - 70	Pipe pin	a-1	2A
99.331.228		3,2 - 45	Split	3.2 - 45	Split pin	a-4	9A
99.331.308		4 - 20	Split	4 - 20	Split pin	b-3	5A
99.331.312		4 - 25	Split	4 - 25	Split pin	c-1	5A
99.331.316		4 - 32	Split	4 - 32	Split pin	xb-4	3A
99.331.520		5 - 35	Split	5 - 35	Split pin	xc-4	9A
99.331.644		6,3 - 63	Split	6.3 - 63	Split pin	c-4	4A
99.331.901		ϕ6	Fergusonsplit	ϕ6	Linch pin	xc-1	9A
99.333.005		ϕ8,4 /ϕ18 - 1,25	Plan skive	ϕ8.4 /ϕ18 - 1.25	Washer, plan		
99.333.010		ϕ10,5/ϕ22 - 1,25	Plan skive	ϕ10.5/ϕ22 - 1.25	Washer, plan		
99.333.015		ϕ13,5/ϕ28,5-1,5	Plan skive	ϕ13.5/ϕ28.5-1.5	Washer, plan		
99.333.020		ϕ14,5/ϕ29 - 1,5	Plan skive	ϕ14.5/ϕ29 - 1.5	Washer, plan		
99.333.100		ϕ7,4 /ϕ14 - 1,6	Facetskive	ϕ7,4 /ϕ14 - 1.6	Facet washer		
99.333.105		ϕ8,4 /ϕ17 - 1,6	Facetskive	ϕ8,4 /ϕ17 - 1.6	Facet washer		
99.333.110		ϕ10,5/ϕ21 - 2	Facetskive	ϕ10.5/ϕ21 - 2	Facet washer		
99.333.115		ϕ13 /ϕ24 - 2,5	Facetskive	ϕ13 /ϕ24 - 2.5	Facet washer		
99.333.125		ϕ17 /ϕ30 - 3	Facetskive	ϕ17 /ϕ30 - 3	Facet washer		
99.333.130		ϕ21 /ϕ37 - 3	Facetskive	ϕ21 /ϕ37 - 3	Facet washer		
99.333.504		ϕ3,3 /ϕ10 - 0,8	Plan skive	ϕ3.3 /ϕ10 - 0.8	Washer, plan		
99.333.507		ϕ13 /ϕ5,3 - 1	Plan skive	ϕ13 /ϕ5.3 - 1	Washer, plan		
99.334.000		ϕ6,4	Stjerneskive	ϕ6.4	Star washer		
99.334.010		ϕ10	Stjerneskive	ϕ10	Star washer		
99.334.020		ϕ12,5	Stjerneskive	ϕ12.5	Star washer		
99.334.130		ϕ21	Stjerneskive	ϕ21	Star washer		
99.335.010		A 3/8	Centerfjederskive	A 3/8	Center spring washer		
99.335.015		A 5/16	Centerfjederskive	A 5/16	Center spring washer		
99.335.110		A 10	Centerfjederskive	A 10	Center spring washer		
99.335.265		B 20	Fjederskive	B 20	Spring washer		
99.335.309		C 18	Konisk fjederskive	C 18	Conical spring washer		
99.350.015		U 25 - 1,2	Seegerring	U 25 - 1.2	Circlip	b-2	21A
99.350.020		U 30 - 1,5	Seegerring	U 30 - 1.5	Circlip	b-1	17A

Del nr. Part No.	Antal Number	Benævnelse		Description		Index Pos.	Index Side/Page
99.350.045		U 55	Seegerring	U 55	Circlip	d-4	21A
99.350.120		I 30	Seegerring	I 30	Circlip	xd-5	24A
99.350.196		I 130 - 4	Seegerring	I 130 - 4	Circlip	c-4	25A
99.352.005		Φ26/Φ38	Spændebånd	Φ26/Φ38	Clip	xb-3	7A
99.354.016		A 8 - 7 - 32	Pasfeder	A 8 - 7 - 32	Key	b-1	15A
99.354.028		A 10 - 8 - 40	Pasfeder	A 10 - 8 - 40	Key	c-2	20A
99.354.044		A 12 - 8 - 45	Pasfeder	A 12 - 8 - 45	Key	b-2	15A
99.354.054		A 14 - 9 - 50	Pasfeder	A 14 - 9 - 50	Key	d-4	14A
99.354.056		A 14 - 9 - 56	Pasfeder	A 14 - 9 - 56	Key	xc-5	14A
99.354.069		A 16 - 10 - 65	Pasfeder	A 16 - 10 - 65	Key	a-2	21A
99.402.001		Φ 8 - Φ 8	Lige forskruning	Φ 8 - Φ 8	Straight screwed connection	xd-2	28A
99.402.012		Φ12 - Φ12	Lige forskruning	Φ12 - Φ12	Straight screwed connection	a-4	6A
99.402.015		Φ20 - Φ20	Lige forskruning	Φ20 - Φ20	Straight screwed connection	b-3	28A
99.402.119		Φ 8 - 3/8"	Lige forskruning	Φ 8 - 3/8"	Straight screwed connection	xc-5	27A
99.402.123		Φ12 - 1/2"	Lige forskruning	Φ12 - 1/2"	Straight screwed connection	d-5	27A
99.402.125		Φ20 - 3/4"	Lige forskruning	Φ20 - 3/4"	Straight screwed connection	xb-5	28A
99.402.353		1/4" - 3/8" RG	Brystnippel	1/4" - 3/8" RG	Hexagon nipple	c-5	6A
99.402.364		1/2" - 5/8"	Brystnippel	1/2" - 5/8"	Hexagon nipple	d-3	29A
99.402.905			Blændprop		Plug	xb-2	26A
99.402.913			Slutprop		Plug	c-4	26A
99.402.923		Φ12 - Φ8	Lige forskruning	Φ12 - Φ8	Straight screwed connection	xc-4	27A
99.402.946		Φ 8	Lige skotforskruning	Φ 8	Straight bulkhead screwed connection	a-1	27A
99.403.014		Φ12 - Φ12	Vinkelforskruning	Φ12 - Φ12	Angle screwed connection	a-5	6A
99.403.212		Φ20 - Φ20	Vinkelforskruning	Φ20 - Φ20	Angle screwed connection	c-4	28A
99.403.220		Φ 8 - 1/4"	Vinkelforskruning	Φ 8 - 1/4"	Angle screwed connection	xc-2	28A
99.403.230		Φ12 - 3/8"	Vinkelforskruning	Φ12 - 3/8"	Angle screwed connection	c-1	27A
99.403.845		Φ 8 - Φ 8	Vinkelskotforskruning	Φ 8 - Φ 8	Angle bulkhead screwed connection	c-5	29A
99.404.225		Φ 8 - Φ 8	L-forskruning	Φ 8 - Φ 8	L-screwed connection	xd-5	29A
99.404.226		Φ12	L-forskruning	Φ12	L-screwed connection	xc-4	27A
99.404.229		Φ12	T-forskruning	Φ12	T-screwed connection	xc-3	6A
99.405.019		Φ12 - Φ12	Krydsforskruning	Φ12 - Φ12	Cross screwed connection	c-4	6A
99.406.110		Φ 8	Omløbermøtrik	Φ 8	Union nut	xd-2	28A
99.406.112		Φ12	Omløbermøtrik	Φ12	Union nut	xc-4	6A
99.406.117		Φ15	Omløbermøtrik	Φ15	Union nut	xa-5	7A
99.406.125		Φ20	Omløbermøtrik	Φ20	Union nut	xb-5	28A

Del nr. Part No.	Antal Number	Benævnelse		Description		Index Pos.	Index Side/Page
99.406.404		ϕ 8	Skærering	ϕ 8	Olive	xd-2	28A
99.406.412		ϕ12	Skærering	ϕ12	Olive	xc-4	6A
99.406.417		ϕ15	Skærering	ϕ15	Olive	xa-5	7A
99.406.425		ϕ20	Skærering	ϕ20	Olive	xb-5	28A
99.406.820		M 14 - 1,5	Sekskantmøtrik	M 14 - 1.5	Hexagon nut	c-5	29A
99.407.148			Ventilblok komplet		Valve block complete	d-2	26A
99.407.149			Kontraventil		Counter valve	c-3	26A
99.407.150			Magnetventil		Magnetic valve	c-5	26A
99.407.151			Kontraventil		Counter valve	xb-4	26A
99.407.152			Magnetventil		Magnetic valve	xb-4	26A
99.407.154			Kontraventil		Counter valve	a-2	26A
99.407.155			Magnetventil		Magnetic valve	b-2	26A
99.407.156			Overtryksventil		Excess-pressure valve	b-2	26A
99.407.157			Ventil		Valve	a-3	26A
99.407.158			Spærreventil		Stop valve	b-2	26A
99.407.615			Støvhætte, blå		Dust cap, blue	a-2	28A
99.407.616			Støvhætte, rød		Dust cap, red	b-1	28A
99.407.801			Blok		Block	c-3	26A
99.407.806			Blok		Block	xb-3	26A
99.407.807			Dyse		Nozzle	xb-4	26A
99.407.827		M 6 - 8	Skrue	M 6 - 8	Screw	a-2	26A
99.407.828			Blok		Block	a-2	26A
99.407.836	1		Højtryksfilter		Pressure filter	c-2	28A
99.407.837	1		Filter		Filter	c-3	28A
99.407.875		M 5 - 148	Skrue	M 5 - 148	Screw	b-3	26A
99.407.877			Spole		Spool	a-2	26A
99.407.881			Pakningssæt		Gasket set	d-4	26A
99.407.883			Pakningssæt		Gasket set	d-4	26A
99.407.884			Pakningssæt		Gasket set	b-1	26A
99.407.888			Hætte		Cap	c-5	26A
99.407.889			Omløber		Union	c-5	26A
99.407.892			Spole		Spool	d-5	26A
99.407.894			Pakningssæt		Gasket set	b-3	26A
99.407.895			O-ring		O-ring	xa-2	26A
99.407.896			Omløber		Union	a-2	26A
99.407.897			O-ring		O-ring	c-5	26A
99.407.898			O-ring		O-ring	d-5	26A

Del nr. Part No.	Antal Number	Benævnelse		Description		Index Pos.	Index Side/Page
99.408.073			Hydraulikmotor		Hydraulic motor	c-1	15A
99.408.912			Trykakkumulator		Pressure accumulator	d-5	27A
99.408.967			Manometer		Manometer	a-2	27A
99.408.970			Manometerforskruning		Manometer connection	a-2	27A
99.412.005			Cylinder		Cylinder	d-1	27A
99.412.105			Cylinderrør		Cylinder tube	c-2	27A
99.412.106			Stempelstang		Piston rod	d-2	27A
99.412.107			Cylinderforing		Cylinder lining	d-2	27A
99.412.108			Stempel		Piston	c-2	27A
99.412.109			Pakningssæt		Gasket set	d-3	27A
99.417.004		Φ6	Smørenippel	Φ6	Greasing nipple	c-5	4A
99.417.025		M 6 type I	Smørenippel	M 6 type I	Greasing nipple	xd-1	1A
99.417.026		M 6 type II	Smørenippel	M 6 type II	Greasing nipple	b-1	17A
99.417.027		M 6 type III	Smørenippel	M 6 type III	Greasing nipple	xa-1	14A
99.417.030		M 8 type I	Smørenippel	M 8 type I	Greasing nipple	d-3	5A
99.417.032		M 8 type III	Smørenippel	M 8 type III	Greasing nipple	xd-5	24A
99.420.142		52 - 3	O-ring	52 - 3	O-ring	c-3	28A
99.420.211		17,3 - 2,4	O-ring	17.3 - 2.4	O-ring	b-1	28A
99.420.227		31,8 - 3,5	O-ring	31.8 - 3.5	O-ring	b-2	8A
99.422.015			Lameltætning		Lamella sealing	d-5	19A
99.424.063		BA 35/ 62 - 10	Zimmerring	BA 35/ 62 - 10	Oil seal	a-3	23A
99.424.070		CB 70/100 - 10	Zimmerring	CB 70/100 - 10	Oil seal	c-5	4A
99.428.518			Underlagsskive		Washer		
99.428.522		3/8"	Kobberskive	3/8"	Copper washer		
99.432.072	4	16.00 x 15,5	Fælg	16.00 x 15.5	Rim	a-2	4A
99.432.381	4	5.00/55 x 15,5-10	lags dæk	5.00/55 x 15.5-10	ply tyre	b-2	4A
99.432.382	4	5.00/55 x 15,5-14	lags dæk	5.00/55 x 15.5-14	ply tyre	d-2	4A
99.432.681	4	5.00/55 x 15	Slange	5.00/55 x 15	Tube	b-2	4A
99.437.037	4		Navhus		Hub housing	c-5	4A
99.437.053	4		Navhus		Hub housing	d-3	5A
99.437.175	4		Navkapsel		Hub cap	d-4	19A
99.437.186	4		Navkapsel		Hub cap	d-4	4A
99.437.191	4		Navkapsel		Hub cap	d-3	5A
99.437.210	4		Olietætningsring		Sealing ring	d-4	5A
99.437.247	4		Tætningsplade		Tightening plate	c-5	4A
99.437.488	4		Skive		Washer	c-4	5A
99.437.654	24	M 18 - 2,5 - 57	Navbolt	M 18 - 2.5 - 57	Hub bolt	d-3	4A

Del nr. Part No.	Antal Number	Benævnelse		Description		Index Pos.	Index Side/Page
99.437.710	4		Bremsetromle		Brake drum	d-4	4A
99.437.712	4		Bremsetromle		Brake drum	d-4	5A
99.437.715	4		Bremseplade med belægning (A)		Brake shoe with lining (A)	d-4	4A
99.437.716	4		Bremseplade med belægning (B)		Brake shoe with lining (B)	d-4	4A
99.437.718	8		Bremsebakke		Brake shoe	c-4	5A
99.437.720	8		Bremsefjeder		Brake spring	c-3	4A
99.437.725	4	M 20 - 2,5	Justerbolt	M 20 - 2.5	Adjusting bolt	c-4	4A
99.437.728	4	M 20 - 2,5	Sikkerhedsmøtrik	M 20 - 2.5	Safety lock nut	c-4	4A
99.437.733	4		Bremsenøgle		Brake key	a-1	5A
99.437.737	4		Bremsearm		Brake arm	a-1	5A
99.437.738	4		Bremsearm		Brake arm	c-2	5A
99.437.740	4	Ø21/Ø36 - 8	Skive	Ø21/Ø36 - 8	Washer	a-1	5A
99.437.743	4		Gummislange		Rubber tube	a-1	5A
99.437.750	4		Knaststang		Cam rod	c-2	5A
99.437.751	4		Styretap		Guide spindle	c-4	5A
99.437.843	2		Foring		Bush	a-1	5A
99.437.851	4		Ballonhjul		Ballon wheel	d-4	19A
99.437.863	4		Møtrik		Nut	c-4	5A
99.437.864	24		Møtrik		Nut	c-4	5A
99.437.865	4		Møtrik		Nut	d-3	5A
99.437.875	4		Skrue komplet		Screw complete	c-2	5A
99.437.876	24		Skrue		Screw	c-4	5A
99.437.880	4		Fjeder		Spring	c-4	5A
99.437.881	4		Fjeder		Spring	c-4	5A
99.437.885	4		Spindel		Spindle	d-3	5A
99.437.905	1		Trykluftbeholder, 30 l		Compressed air receiver, 30 l	b-3	7A
99.437.908	2		Spændebånd komplet		Clip complete	b-5	7A
99.437.909	2		Filter		Filter	b-2	8A
99.437.910	2		Rørledningsfilter		Piping filter	b-2	8A
99.437.911	1		Afvandingsventil		Drainage valve	b-4	7A
99.437.912	1	M 22/M 22	Dobbelt stuts	M 22/M 22	Double connecting	b-2	8A
99.437.913	2	M 22	Slangestuts	M 22	Hose connection with thread	a-2	8A
99.437.914	3		Prop		Plug	b-3	7A
99.437.915	2	M 22	Omløber	M 22	Union nut	xb-3	8A
99.437.916	4		Slangestuts		Hose connection with thread	b-3	7A
99.437.917	3	M 22	Lige indskruningsforskruning	M 22	Straight screwed connection	xa-4	7A
99.437.918	1		Krydsforskruning		Cross screwed connection	b-5	7A

Del nr. Part No.	Antal Number	Benævnelse		Description		Index Pos.	Index Side/Page
99.437.919	6	M 16	Slangestuts	M 16	Hose connection with thread	xd-3	7A
99.437.920	1	M 22/M 22	Vinkelstykke	M 22/M 22	Angle piece	a-3	8A
99.437.921	2		Vinkelskotforskruning		Angle screwed connection	d-5	8A
99.437.923	1		T-forskruning		T-screwed connection	c-3	7A
99.437.928	1		Koblingshoved, bremseledning		Coupler head, brake wire	a-3	8A
99.437.929	1		Koblingshoved, fødeledning		Coupler head, feed line	a-1	8A
99.437.930	2	12"	Membrancylinder	12"	Diaphragm cylinder	d-3	7A
99.437.931	2		Membran		Diaphragm	d-3	7A
99.437.933	2	16"	Membrancylinder	16"	Diaphragm cylinder	b-2	7A
99.437.934	2		Membran		Diaphragm	c-1	7A
99.437.944	1		Bremseventil, 2-leder		Brake valve, 2-guide	b-2	8A
99.437.945	1		Reparationssæt		Repair set	b-3	8A
99.437.956	1		Bremsekraftregulator, 2-leder		Brake force regulator, 2-guide	c-1	8A
99.437.957	1		Reparationssæt		Repair set	c-1	8A
99.437.962		ϕ16,2/ϕ19,9 - 1,5	Tætningsring	ϕ16.2/ϕ19.9 - 1.5	Sealing ring	xd-3	7A
99.437.965		ϕ22,2/ϕ26,9 - 1,5	Tætningsring	ϕ22.2/ϕ26.9 - 1.5	Sealing ring	xa-5	7A
99.437.970		ϕ20/ϕ28 - 3	Tætningsring	ϕ20/ϕ28 - 3	Sealing ring	b-2	8A
99.450.240		F 20	Gummistrop	F 20	Rubber strap	b-4	10A
99.450.725		M 5	Blindbøsning	M 5	Bushing	d-2	32A
99.450.838			Gummibælg		Rubber bellow	b-2	31A
99.451.838			Trykfjeder		Pressure spring	d-1	12A
99.452.090			S-hage		S-hook	c-1	9A
99.458.001			Stopring		Stop ring	a-1	2A
99.458.023		ϕ8	Bøjlewirelås	ϕ8	Clamp wire lock	xc-5	9A
99.458.024		3/16"	Bøjlewirelås	3/16"	Clamp wire lock	d-2	6A
99.458.089		ϕ25 - 1/4" WG	Kuglehåndtag	ϕ25 - 1/4" WG	Ball handle	b-2	31A
99.458.090		3/8"	Spidskovs	3/8"	Thimble	xc-5	20A
99.458.101		1/2" RG	Rørprop	1/2" RG	Pipe plug	b-5	15A
99.458.102		1/8" RG	Rørprop	1/8" RG	Pipe plug	c-4	34A
99.458.104		3/8" RG	Rørprop	3/8" RG	Pipe plug	d-2	23A
99.458.143			Slibeskive		Emery wheel	d-2	34A
99.458.177			Plastprop		Plastic plug	a-3	6A
99.458.296			Drypsmøre-enhed		Drip-oiling unit	d-3	34A
99.458.297			Skruelåg		Screw cover	c-4	34A
99.458.332			Trekantreflex		Triangle reflector	d-4	32A
99.458.445			Værktøjsholder		Tool holder	a-4	34A

Del nr. Part No.	Antal Number	Benævnelse		Description		Index Pos.	Index Side/Page
99.473.025		16 A 12 V	Relæg	16 A 12 V	Relay	b-4	31A
99.473.026			Fjeder		Spring	b-4	31A
99.473.368			Slagkontakt		Switch	b-1	32A
99.474.330			Positionslygte		Position light	c-1	31A
99.474.335			Baglygte, højre		Rear light, right	c-5	32A
99.474.336			Baglygte, venstre		Rear light, left	d-3	32A
99.475.337			Samledåse		Conduit box	b-4	31A
99.477.110		0,5 ampere	Sikring	0.5 ampere	Fuse	a-2	31A
99.477.136		12 V 5 W	Pære	12 V 5 W	Bulb	c-1	31A
99.477.137		12 V 10 W	Pære	12 V 10 W	Bulb	d-5	32A
99.477.138		12 V 21 W	Pære	12 V 21 W	Bulb	d-5	32A
99.478.111			Stik		Plug	b-2	28A
99.478.143			Stik, hvid		Plug, white	xd-5	26A
99.478.144			Stik, sort		Plug, black	d-4	26A
99.478.183		2-polet	Han-stik	2-pin	Plug, male	a-1	31A
99.478.196		7-polet	Stik	7-pin	Plug	a-4	31A
99.478.211			Møtrik		Nut	b-4	31A
99.478.212			Forskruning		Screwed connection	b-4	31A
99.478.214			Møtrik		Nut	c-4	31A
99.478.215			Forskruning		Screwed connection	c-4	31A
99.478.216			Samlemuffe		Connector		
99.478.219			Blindprop		Hole plug	c-4	31A
99.478.234		ϕ7,5	Kabelbøjle	ϕ7.5	Cable clamp	b-5	32A
99.478.235		ϕ8	Kabelbøjle	ϕ8	Cable clamp	b-5	32A
99.478.237		ϕ23 mm	Kabelgennemføring	ϕ23 mm	Cable lead-in	c-5	32A
99.478.240			Gummigennemføring		Rubber cable lead-in	d-1	31A
99.478.245			Kabelforskruning		Cable protector	c-3	32A
99.478.249			Kabelforskruningsmøtrik		Cable protector nut	c-3	32A
99.478.301			Ledningssamledåse		Cable connection box	c-4	32A
99.478.383			Ledningsrem		Cable belt	a-4	32A
99.478.389			Ledningsrem		Cable belt	xd-3	31A
99.478.390			Ledningsrem		Cable belt	xd-2	31A
99.478.395			Monteringsplade		Mounting plate	xd-3	31A

x Bruges 2 eller flere steder på maskinen.

x To be used two or more places on the machines.

CONVERSION NUMBER:

BASIC UNIT:	SI-METRIC UNIT:	CONVERSION NUMBER:
LENGTH.....	1 m =	39,4 in = 3,3 ft = 1,1 yd = 0,00062 miles (US)
AREA.....	1 m^2 =	1,2 yd^2 = 10,8 ft^2 = 0,00025 acre = 0,0001 ha
VOLUME	1 dm^3 (1l)=	61 in = 0,035 ft = 0,22 gallons (Imp) = 0,26 gallons (US) = 1,76 pints
SPEED	1 m/s =	3,6 km/h = 2,24 mile/h = 3,28 ft/s = 1,94 knob
FORCE	1 N =	0,10 kp = 0,22 lbf
POWER	1 kW =	1,36 hk = 1,34 hp = 102 kpm/s = 860 kcal/h = 737 ft lbf/s
MASS (Weight) ..	1 kg =	2,2 lbs = 0,0197 cwt. = 0,07 slug = 35 oz
MOMENT of Force	1 Nm =	0,102 kpm = 8,8 lbf in = 0,74 lbf ft
PRESSURE	1 kPa =	0,01 atm (kp/cm^2) = 0,14 lbf/in^2 = 7,5 torr
Revolutions	min^{-1} = r.p.m.	

LUBRICANTS:

see lubrication scheme in the instruction book

Supplier	(H)	(L)	Grease Nipples	Roller chains
BP	Hypogear 80 WEP	Hypegear 90 EP	Energrease L 2 M	Penetrating oil
CASTROL ..	Castrol EP 80	Multitrax 80 W/140 EPX 80 W/90 EPX 85 W/140	Castrol MS 3 - Castrol APS 2	Chain grease (Kædefedt) (aerosol)
STATOIL...	Gear oil GP 80 W EP	Gear oil GX 80 W - 90	MP Grease (Moly)	Super oil for chain saw (Super kædesavsolie)
Q 8.....	Q 8 T 35 80 W	Q 8 T 55 80 W/90	Q 8 Rembrandt Moly S 2	Q 8 Giotto/ Q 8 Wagner 220
MOBIL OIL	Mobilube HD 80 W EP	Mobilube HD 80 W-90	Mobilgrease Special	Mobilvactra No. 2
SHELL.....	Spirax MA 80 W	Spirax HD 80 W/90	Retinax A	Kuggfett
TEXACO...	Geartex EP-A 80 W	Geartex EP-C 80 W - 90	Molytex 2 Molytex EP 2	Way Lubricant
OK	OK Gearoil GL 5 80 W	OK Gearoil GL 5 80 W/90	OK Moly grease (OK Moly fedt)	OK Compound 2
HYDRO....	Extra Gearoil SAE 80 W	Hypoid Gearoil 80W/90	Moly D Grease	Moly chain wheel grease (Moly tandhjulsfedt)

TORQUE MOMENT:

Torque moment for bolts normal metric thread quality 8.8 black and/or galvanized and ungreased when tightened on a smooth surface or a plain washer.

Thread Diameter mm	5	6	8	10	12	14	16	20	22
Nm: $^{+10\%}_{0}$	6	10	26	52	90	144	225	436	594

Please check Instruction Book for special torque settings, i.e. for bolts in knives, bearings etc., as this table only refers to bolts without a torque setting in the Instruction Book.